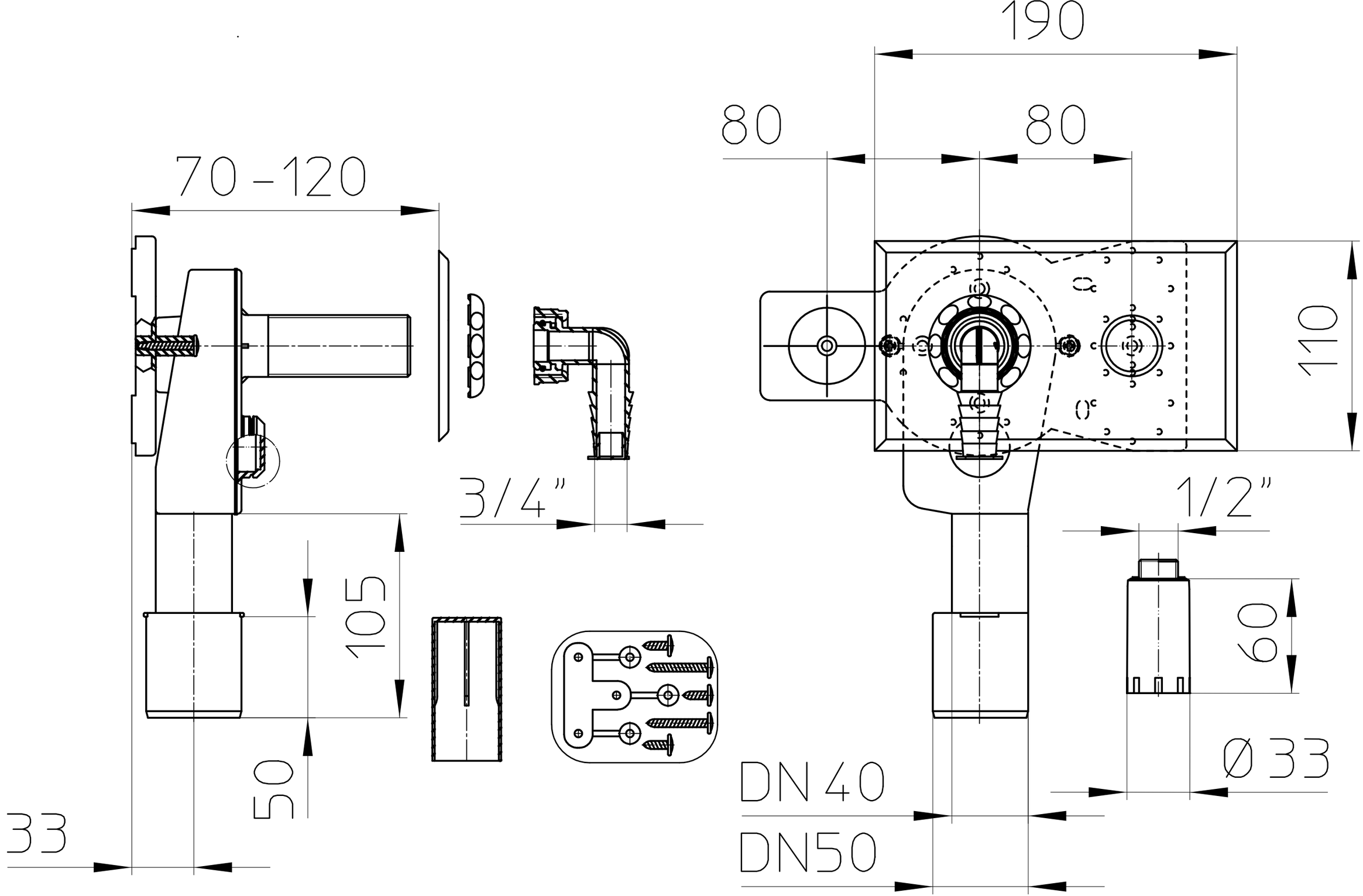
190
80
80
70 -120
110
3/4"
1/2"
105
60
50
Ø 33
33
DN 40
DN50