Pure Freude an Wasser
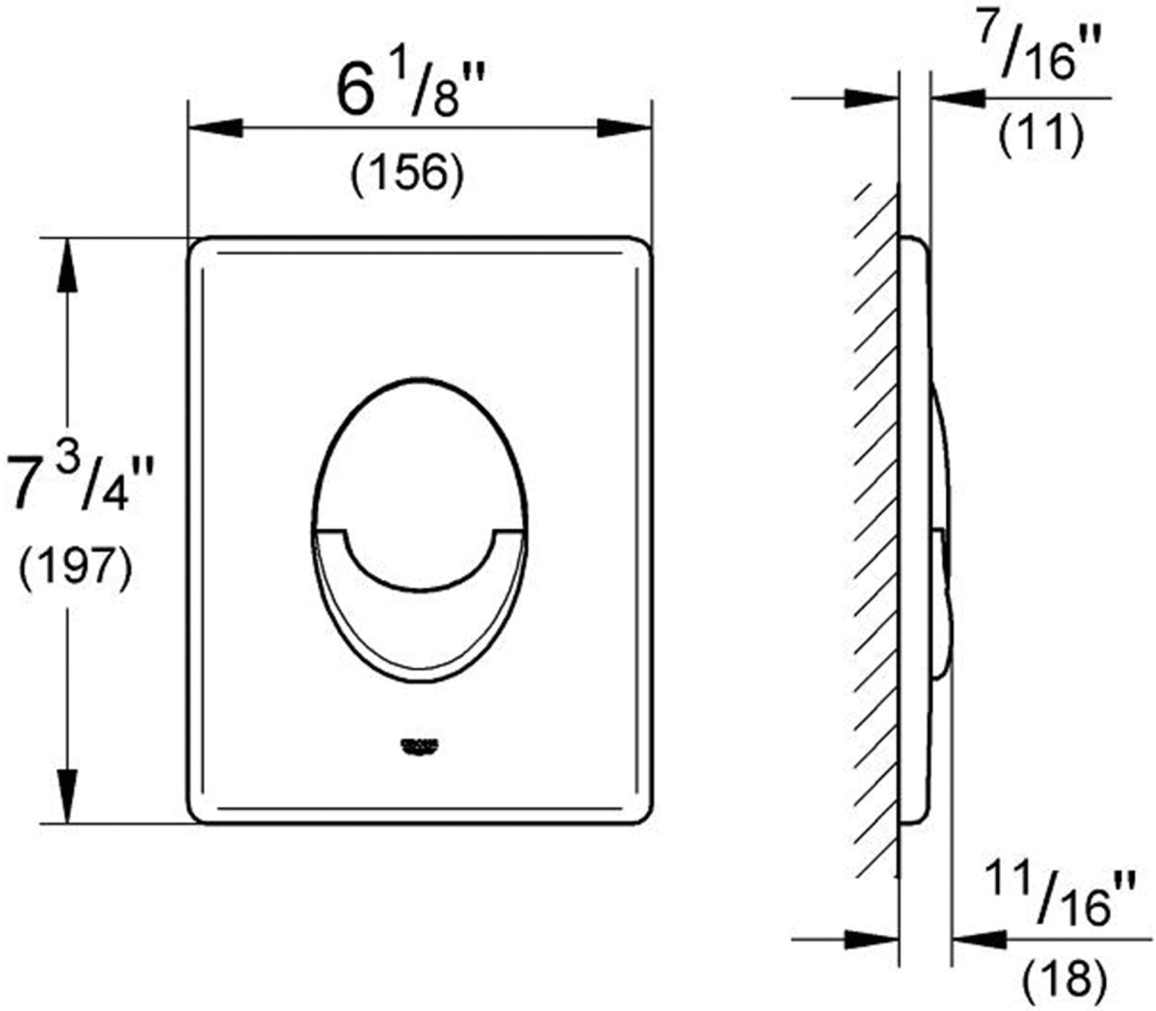
GROHE