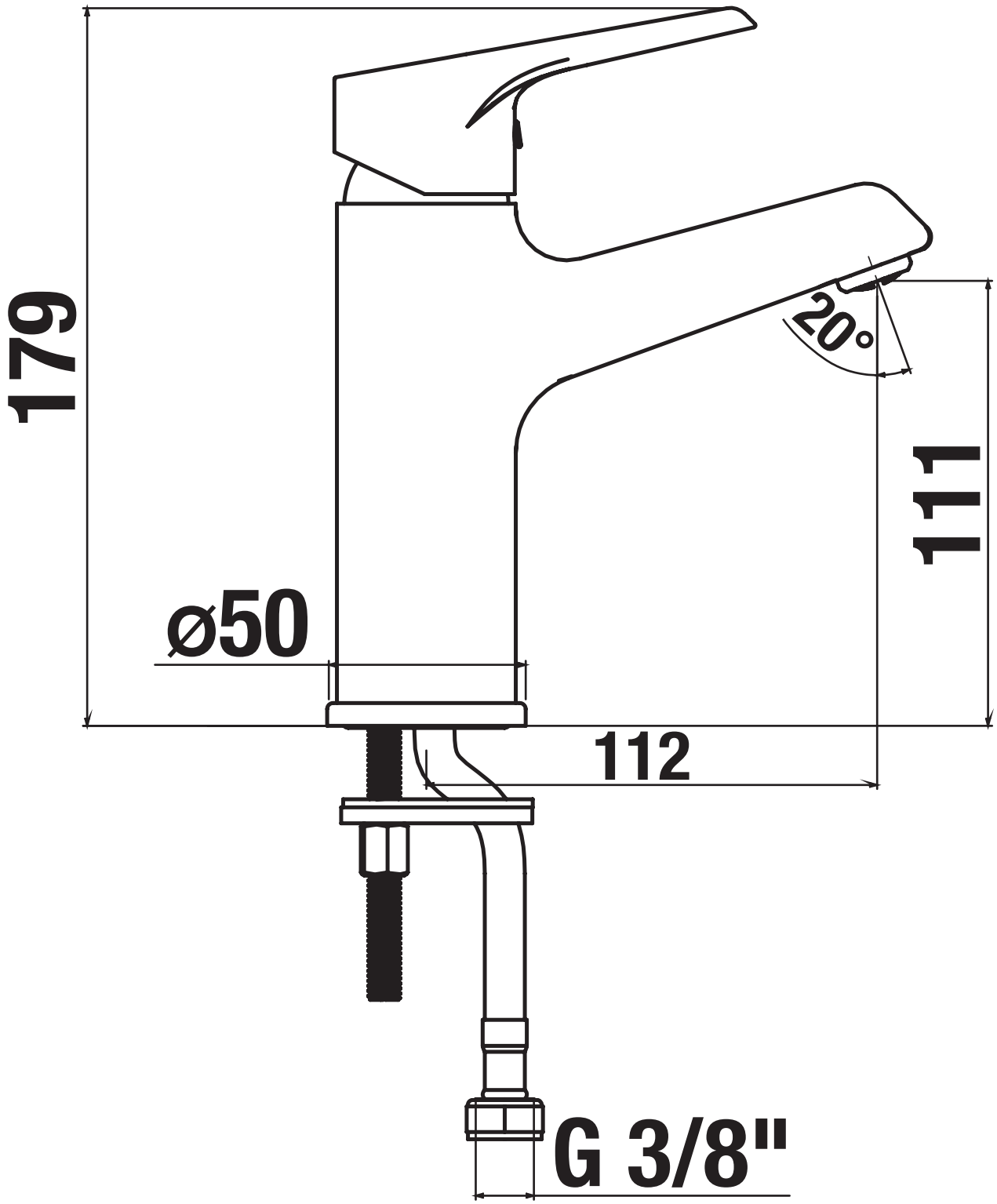
179
20°
111
ø50
112
G 3/8"