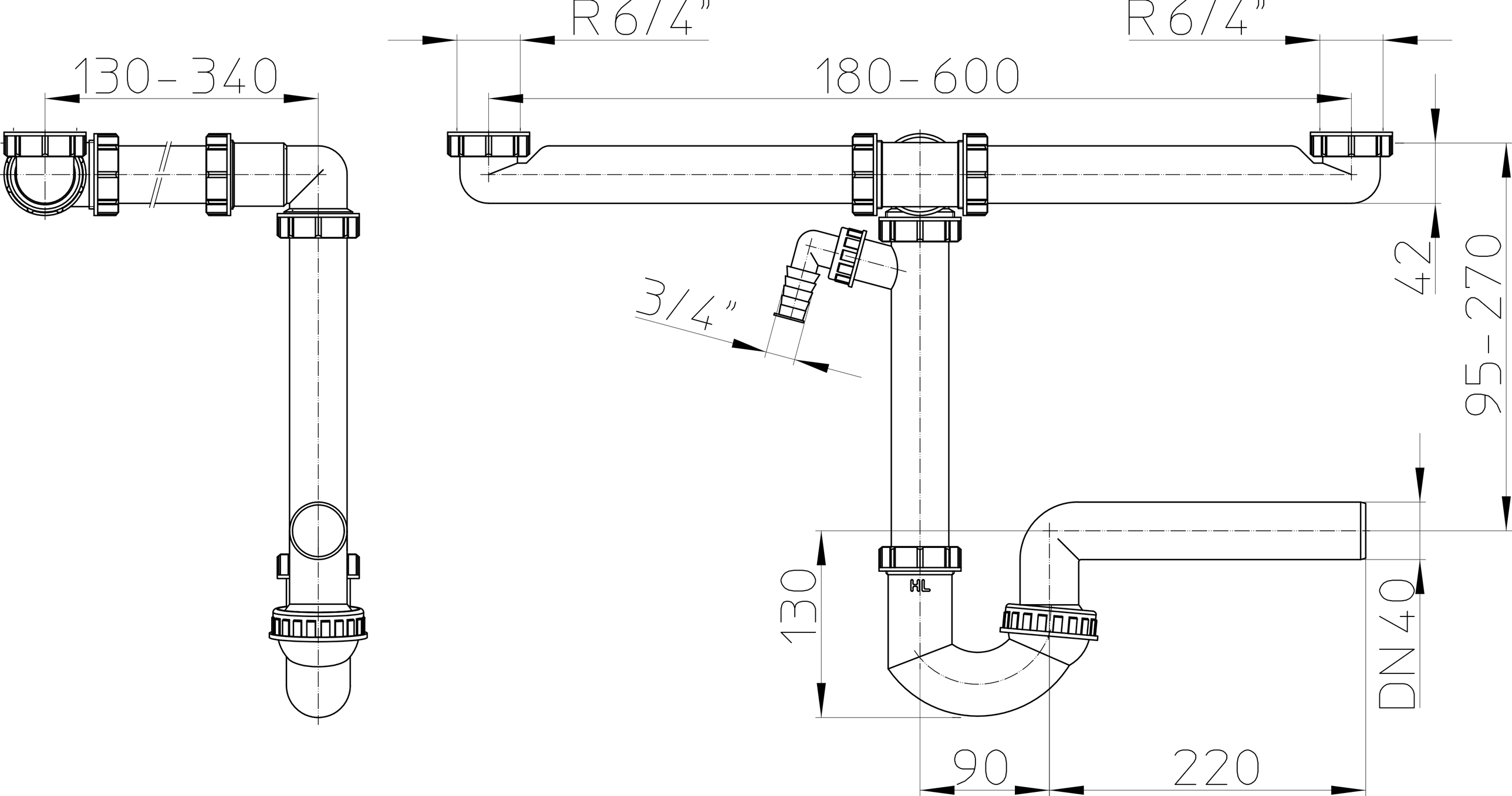
R 6/4"
R 6/4"
130 - 340
180 - 600
42
95 - 270
3/4"
130
HL
DN 40
90
220