TECEplanus (2003 – 2020) + (2021, ...)

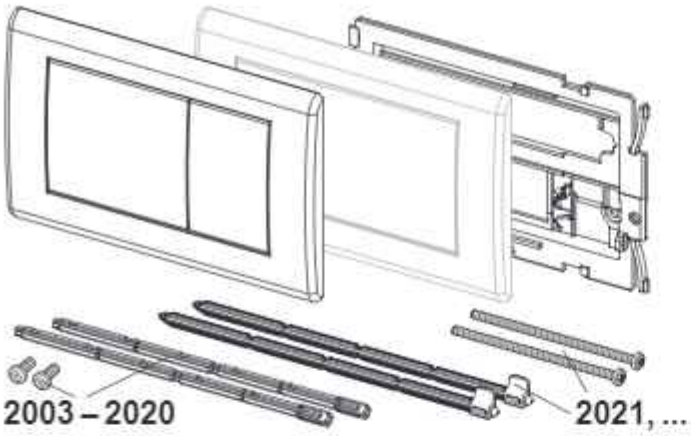

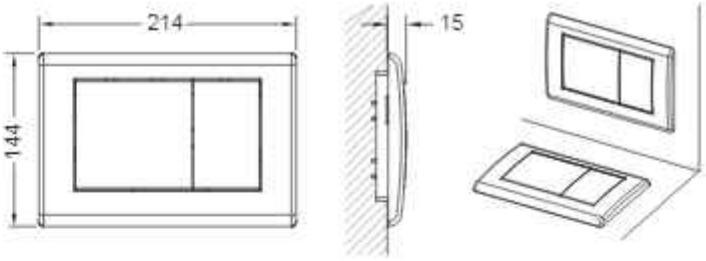

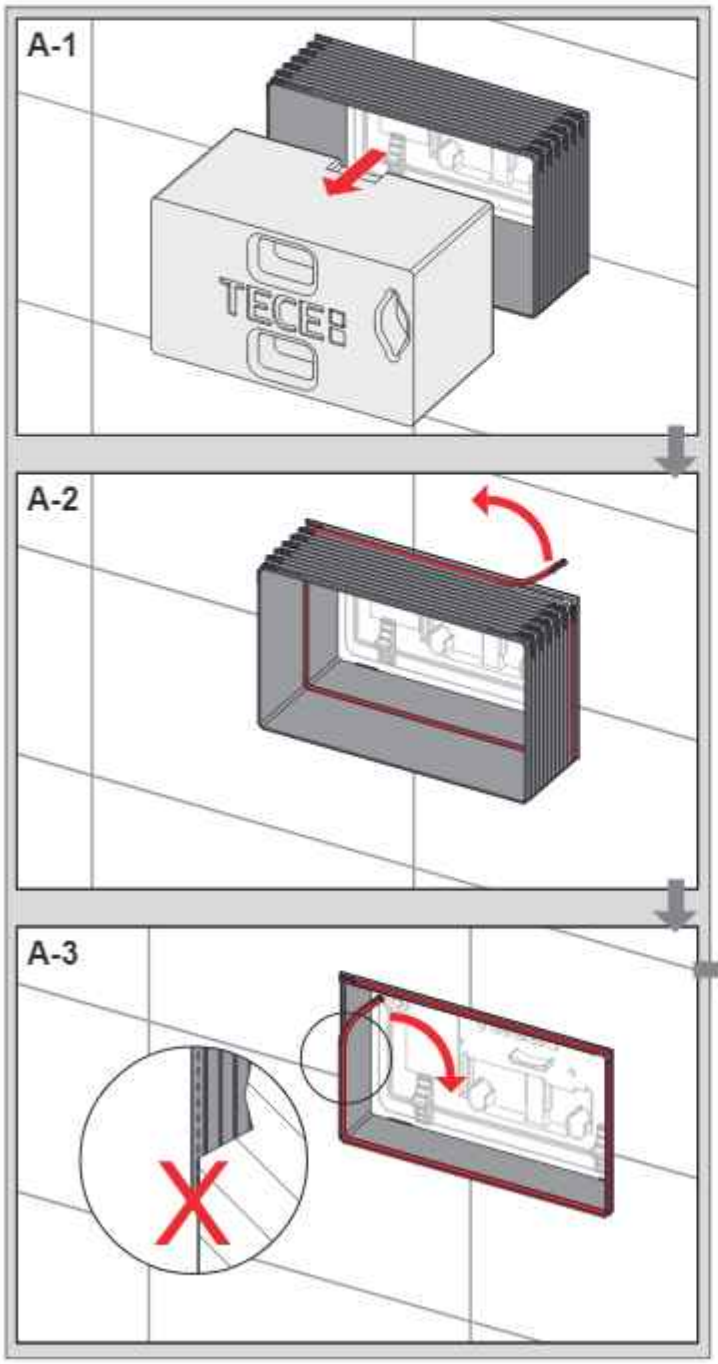

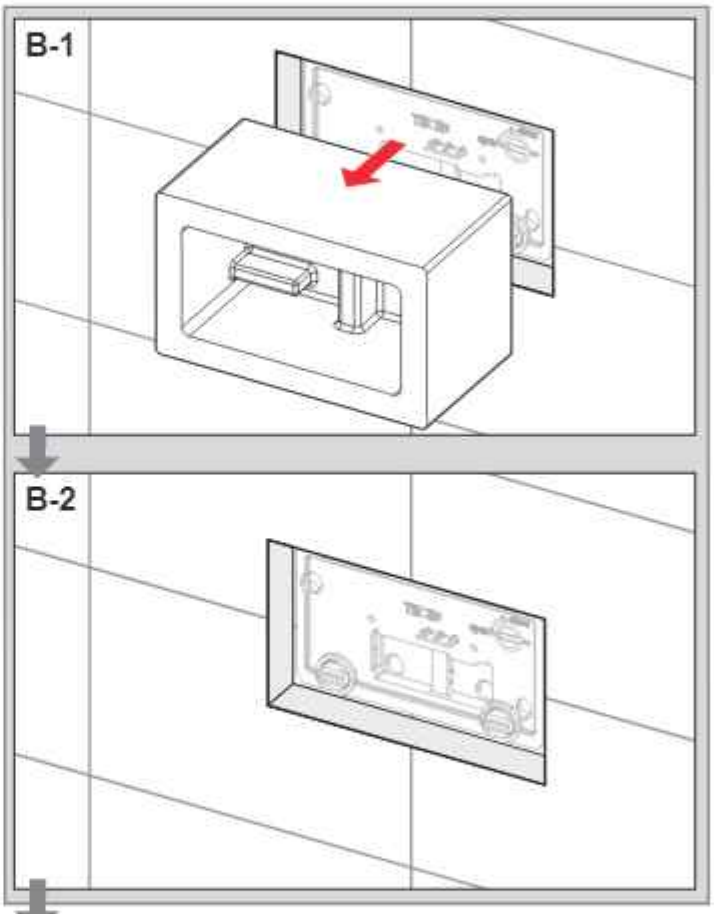

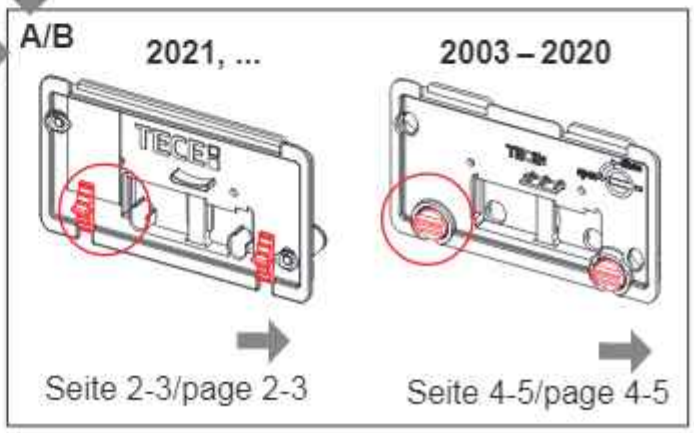

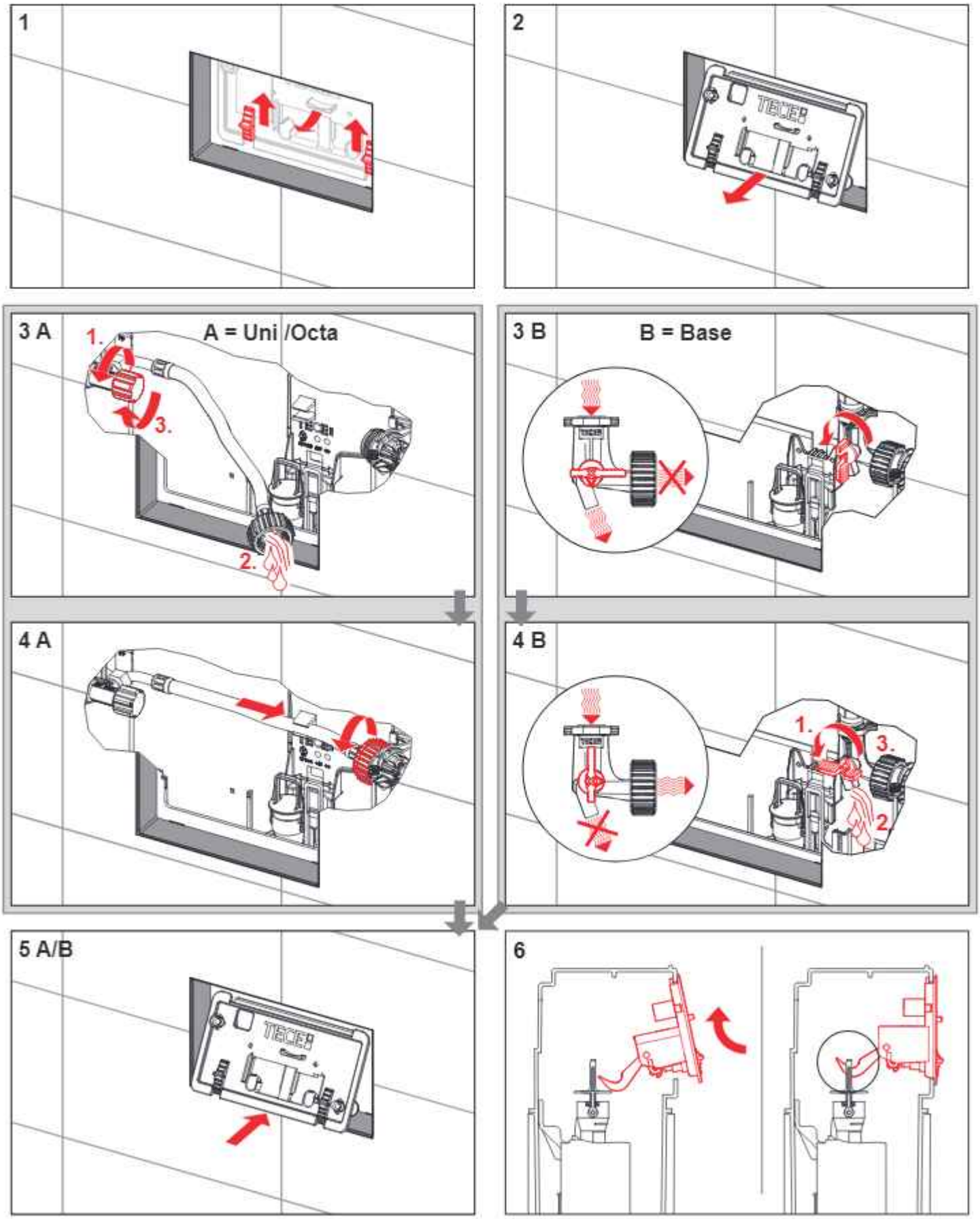
1
2
3 A
A = Uni /Octa
1.
2.
3.
3 B
B = Base
4 A
4 B
1.
2
3.
5 A/B
6

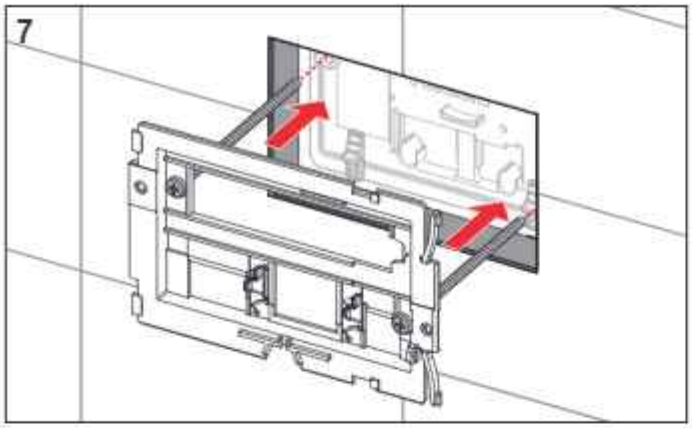
7

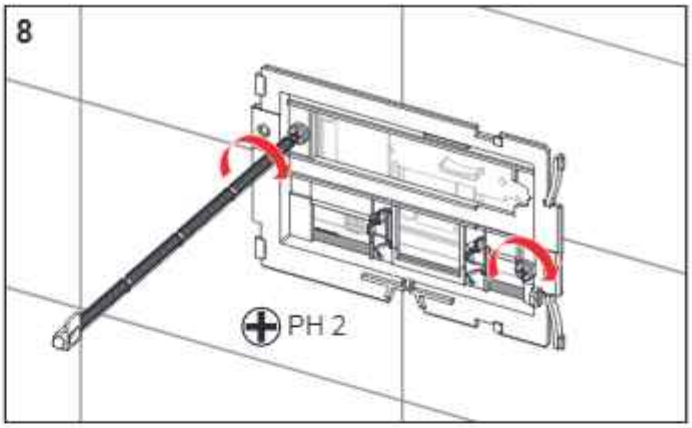
8
PH 2

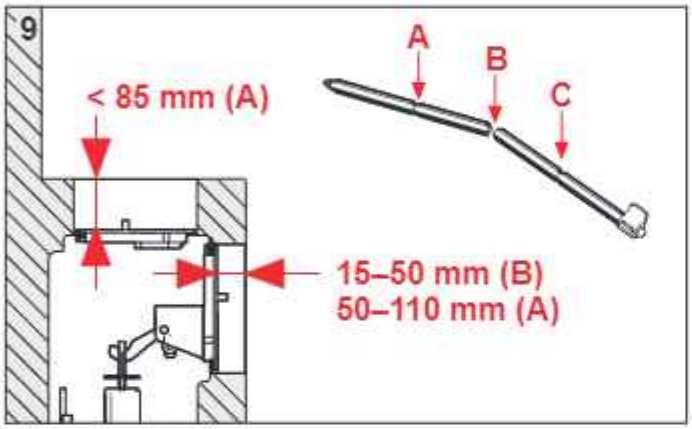
9
< 85 mm (A)
A
B
C
15–50 mm (B)
50–110 mm (A)

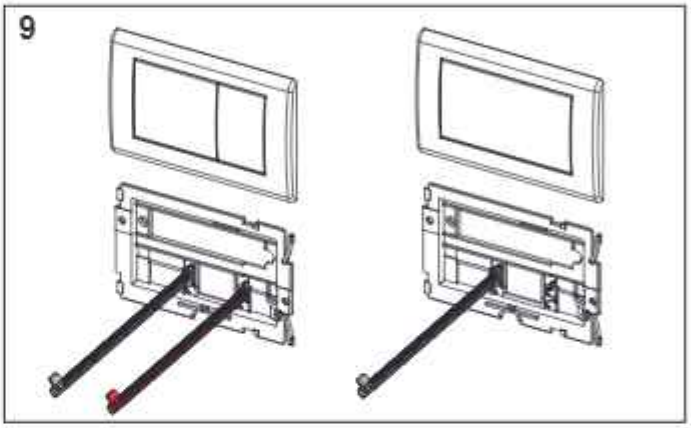
9

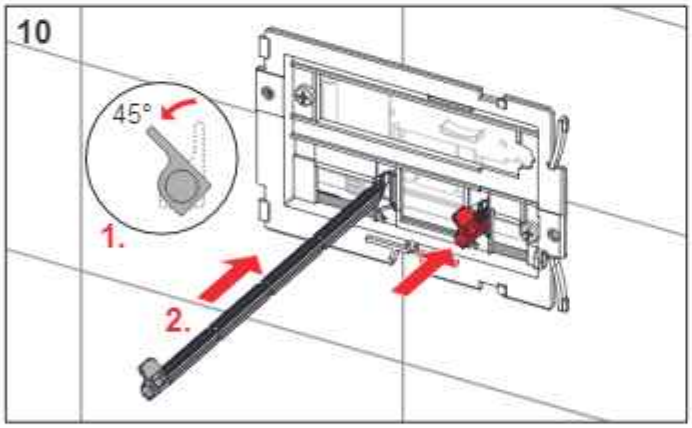
10
45°
1.
2.

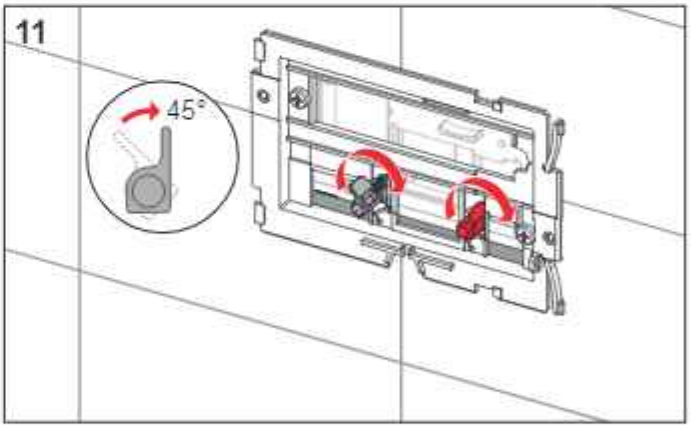
11
45°

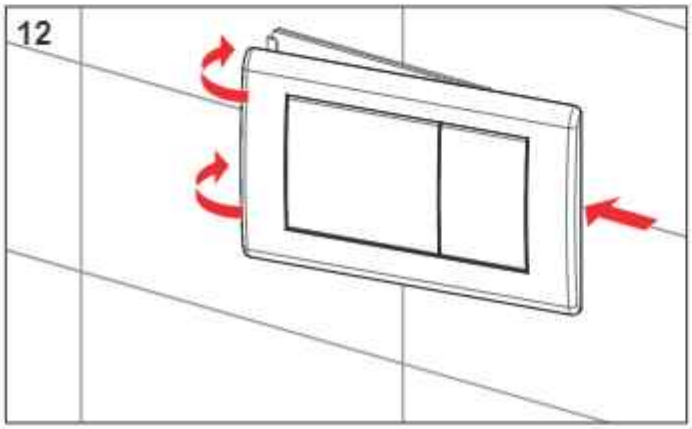
12

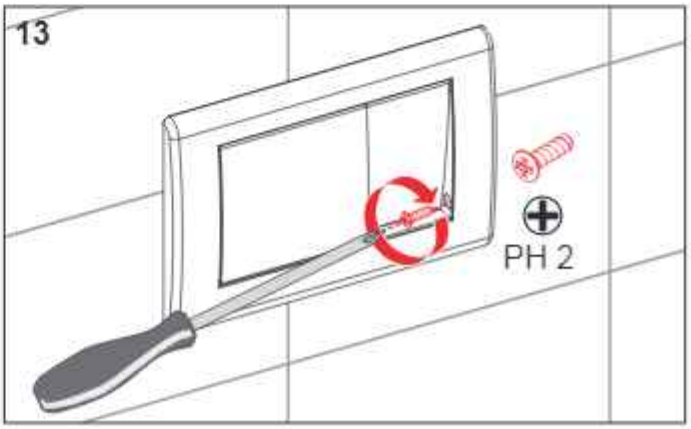
13
PH 2

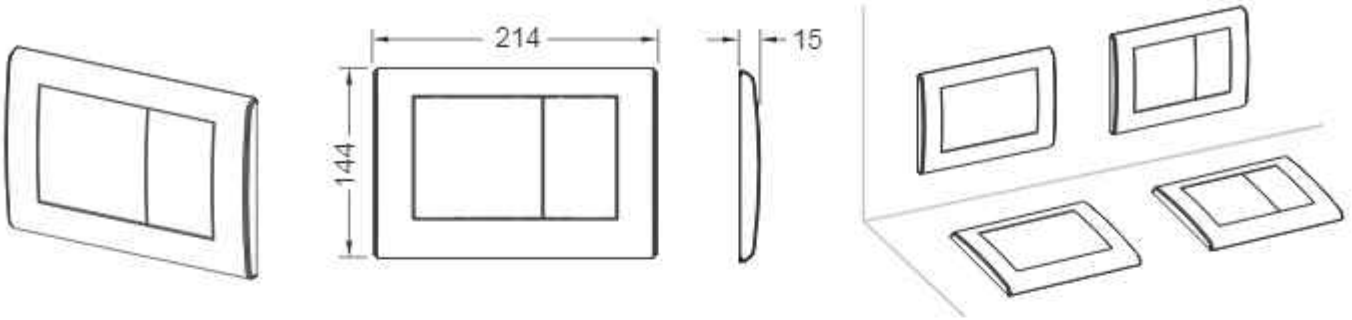
214
15
144

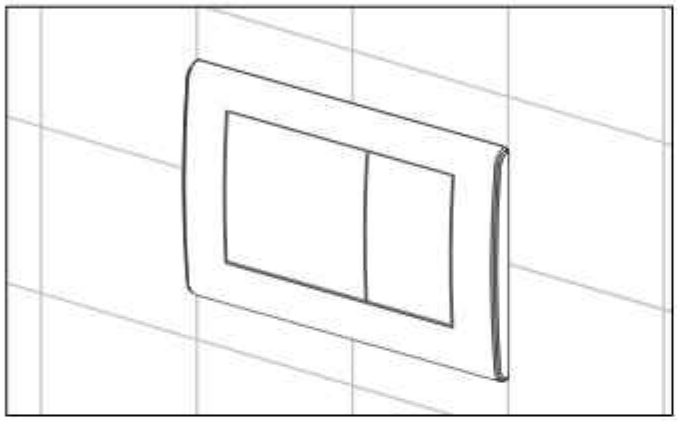

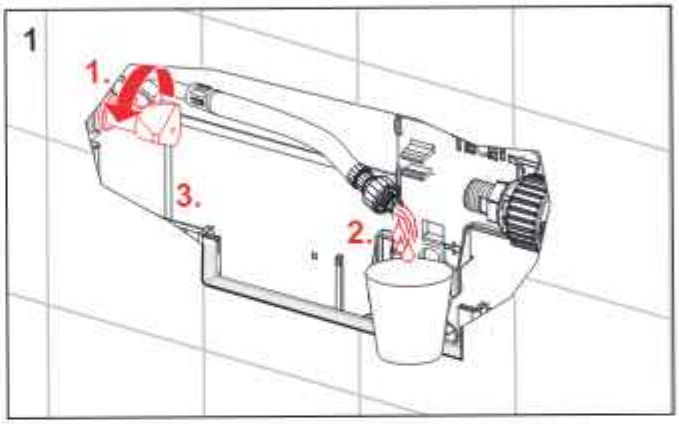
1
1.
3.
2.

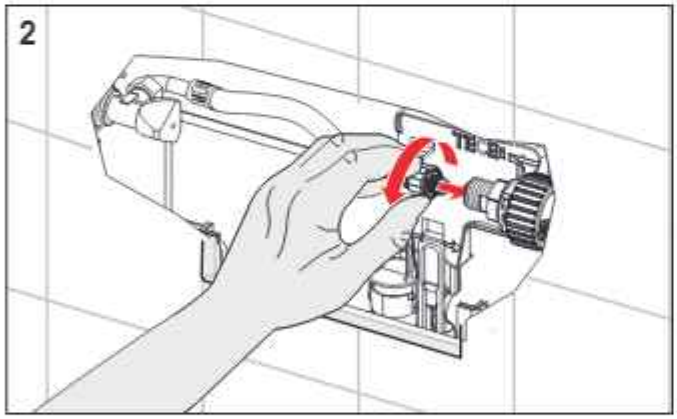
2

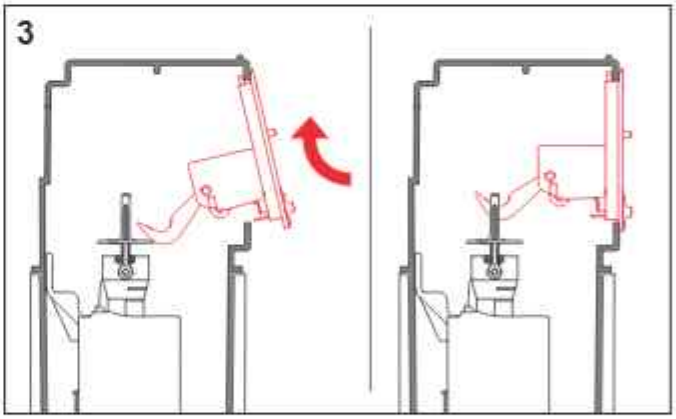
3

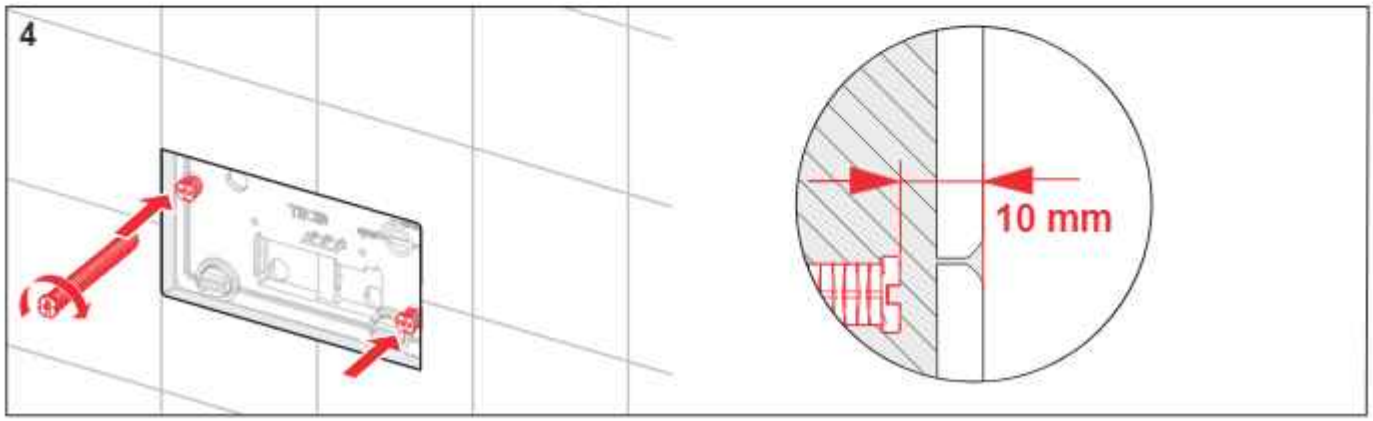
4
10 mm

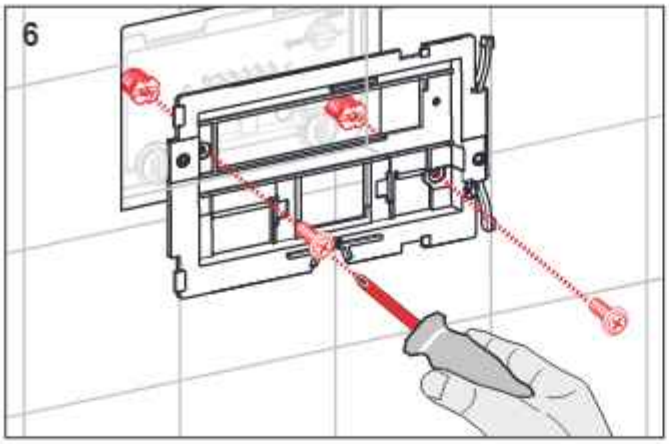
6

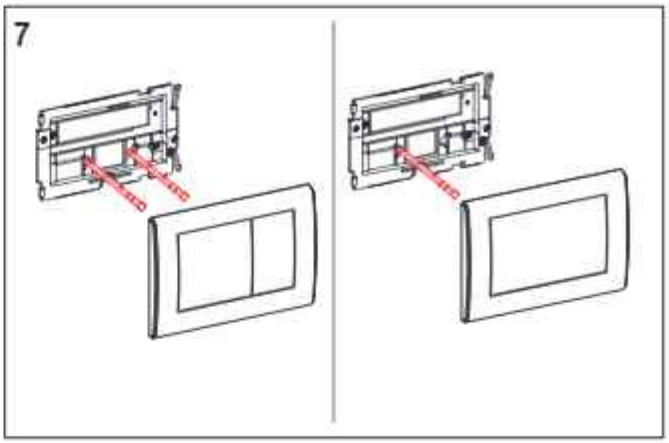
7

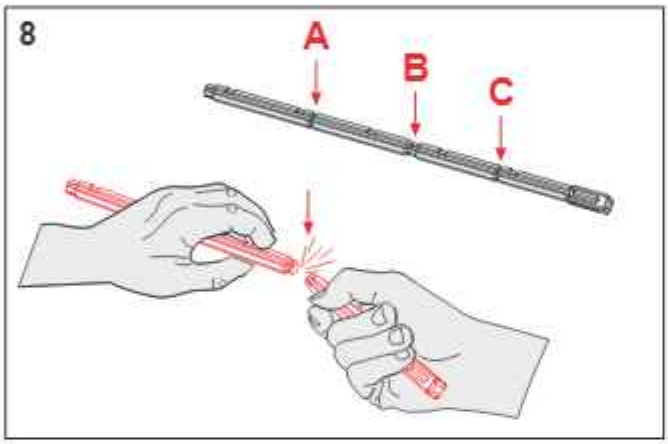
8
A
B
C

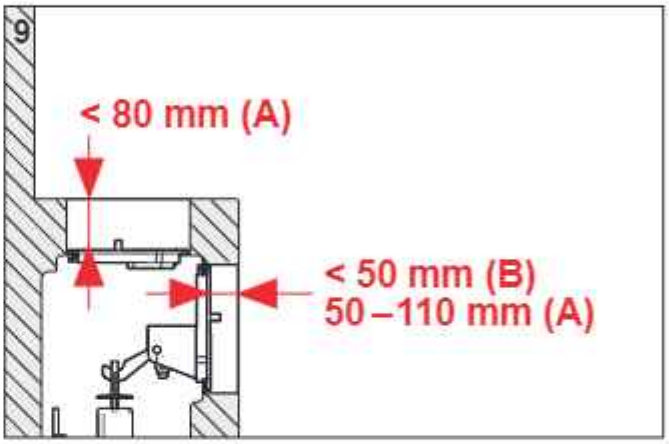
9
< 80 mm (A)
< 50 mm (B)
50 – 110 mm (A)

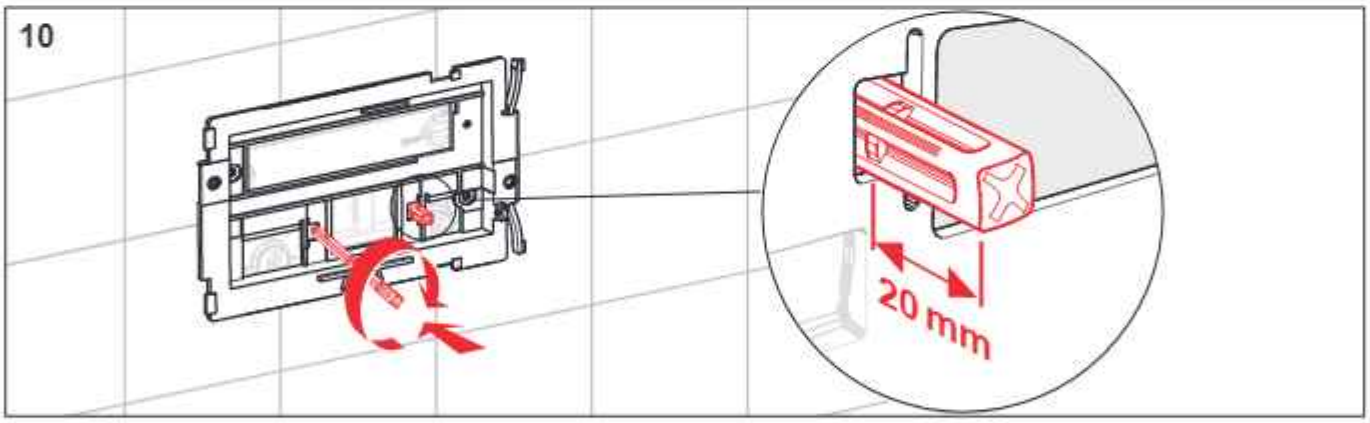
10
20 mm

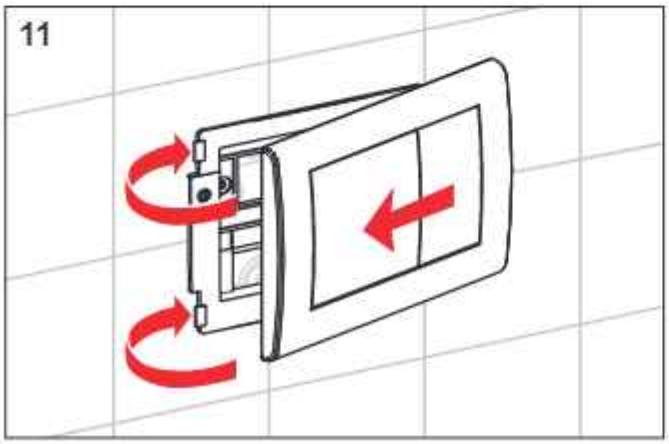
11

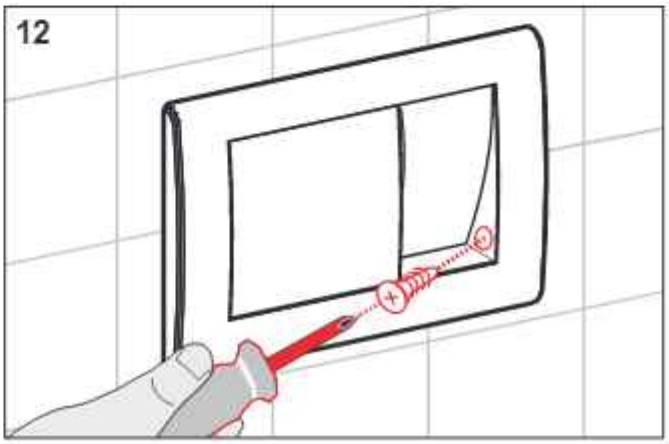
12

SP430 143 00 a