1

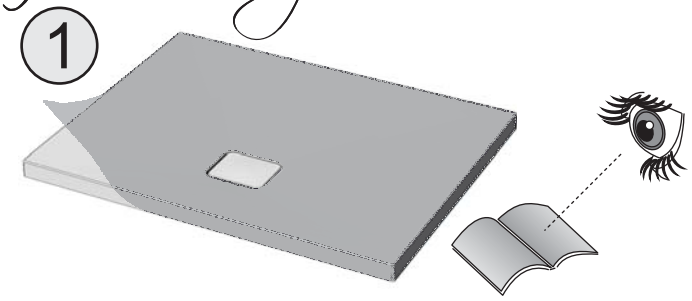

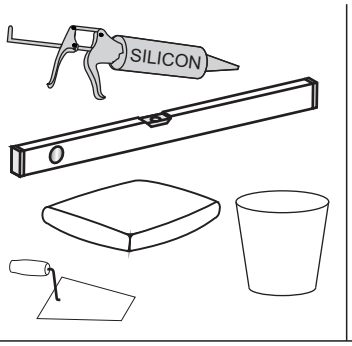
SILICON

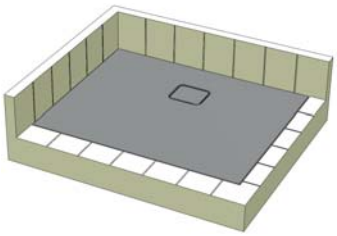

2

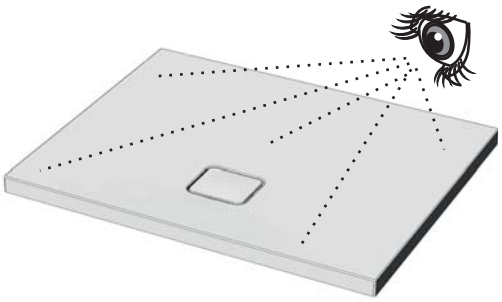

3

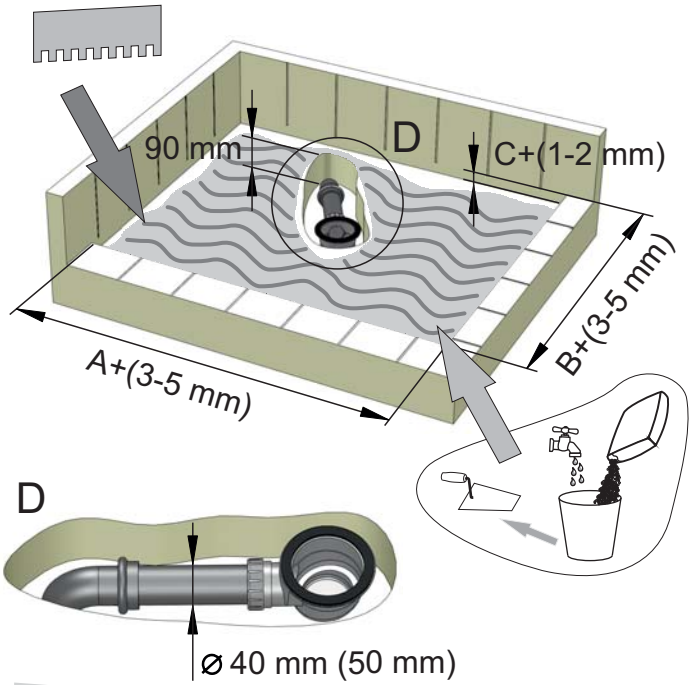
B
C
A
90 mm
D
C+(1-2 mm)
B+(3-5 mm)
A+(3-5 mm)

D
⌀ 40 mm (50 mm)

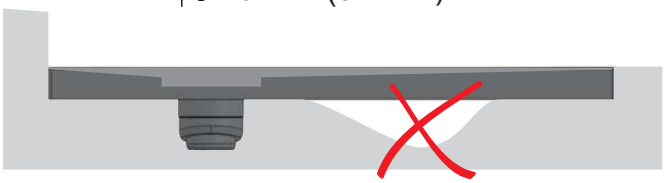

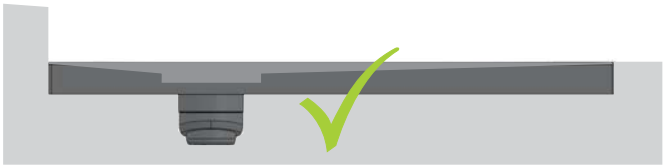

4

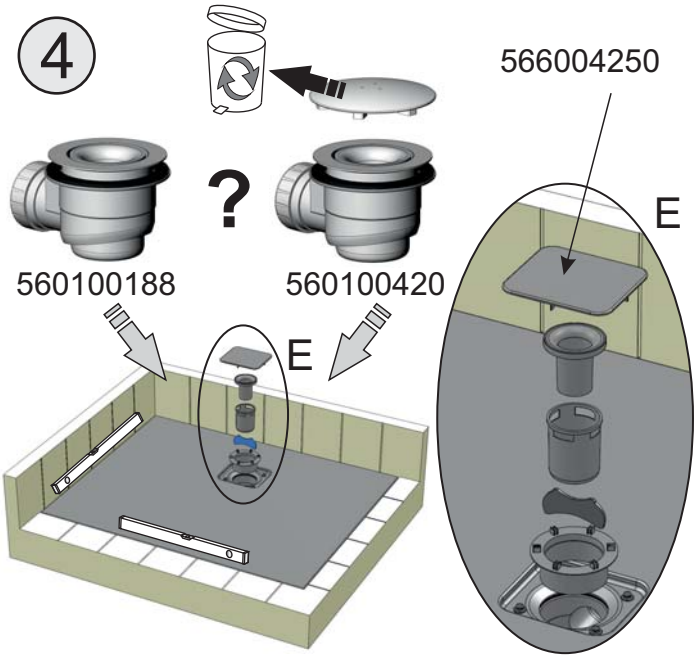
566004250
?
560100188
560100420
E
E

5

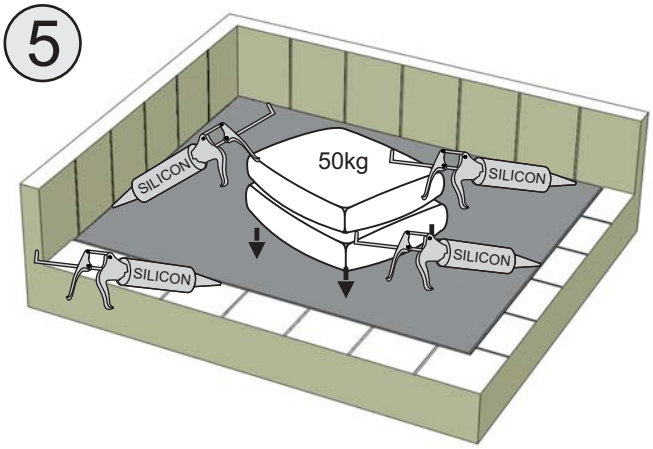
SILICON
50kg
SILICON
SILICON
SILICON

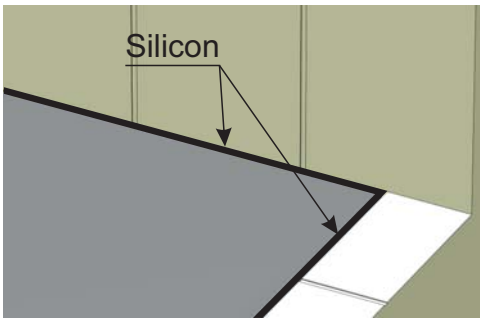
Silicon

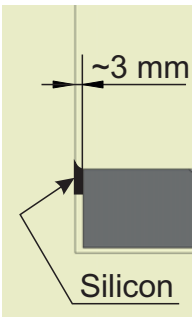
~3 mm
Silicon

48h
max. 60°C

1

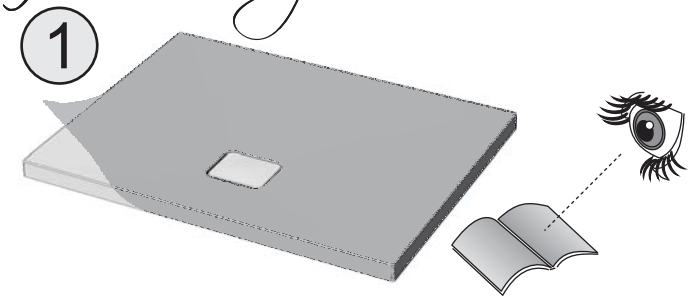

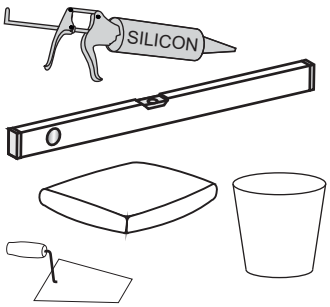
SILICON

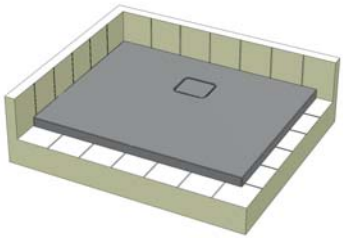

2

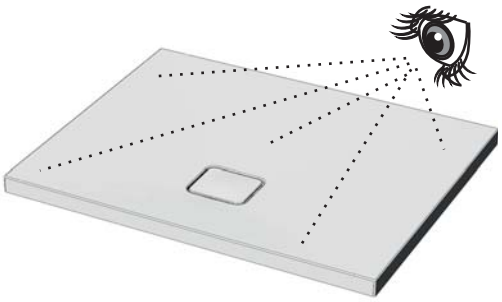

3

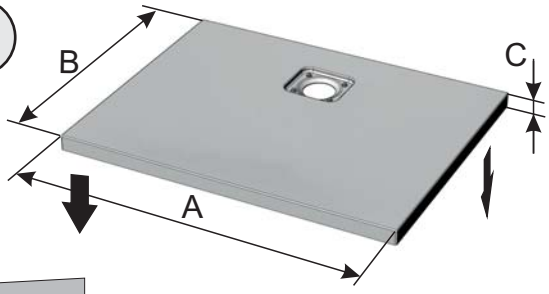
B
C
A

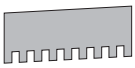

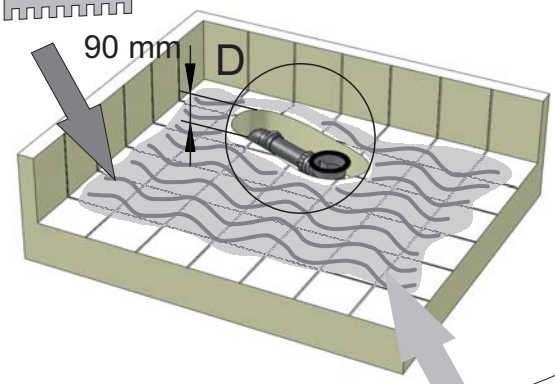
90 mm
D

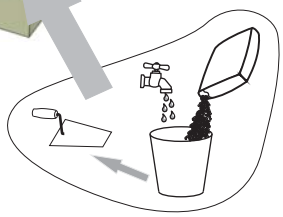

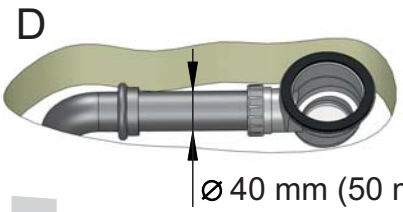
D
⌀ 40 mm (50 mm)

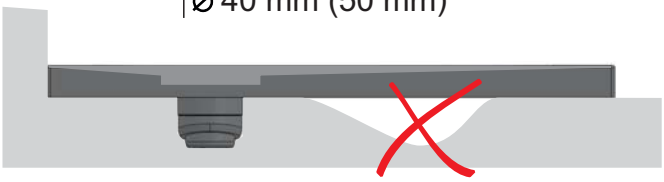

4

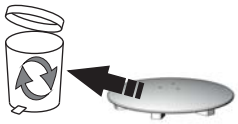

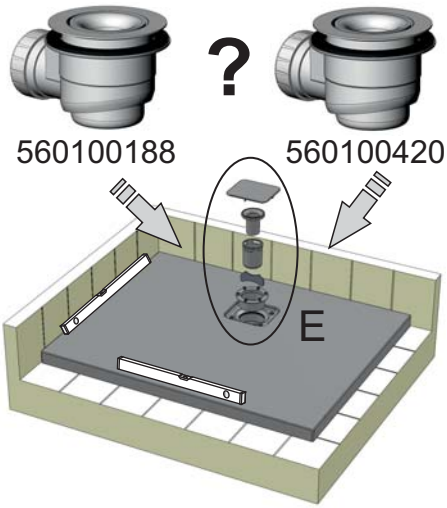
566004250
?
560100188
560100420
E
E

5

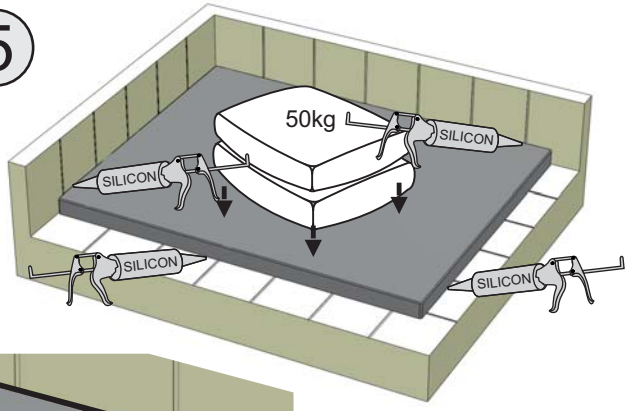
50kg
SILICON
SILICON
SILICON
SILICON

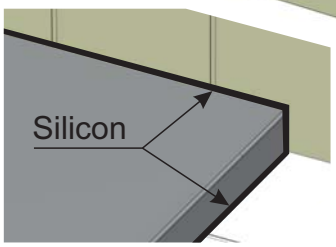
Silicon

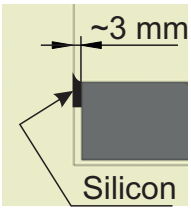
~3 mm
Silicon

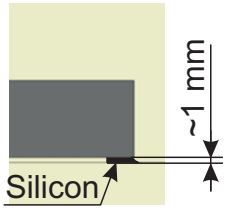
~1 mm
Silicon

48h
max. 60°C

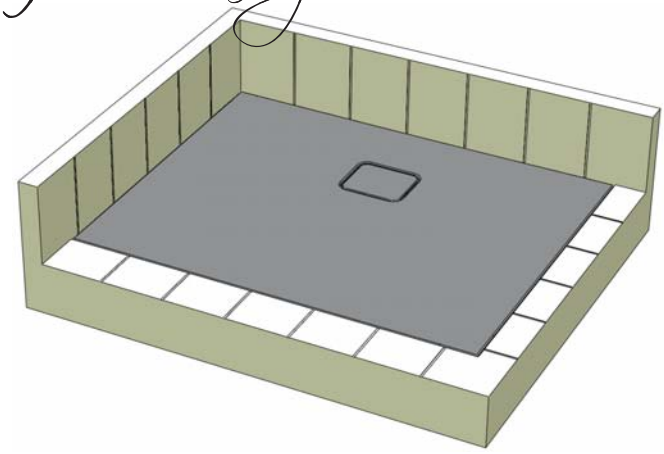

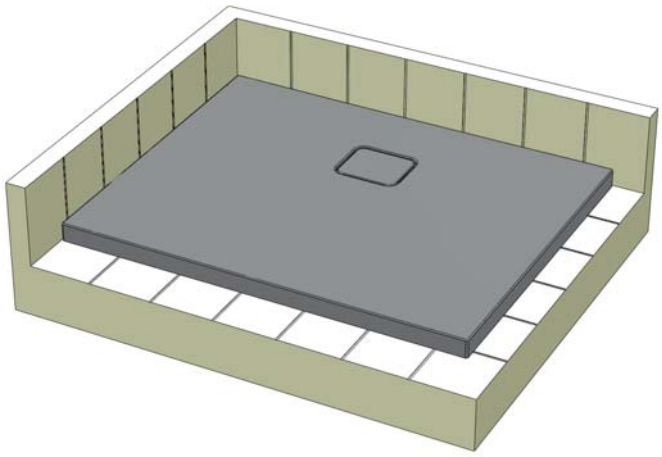

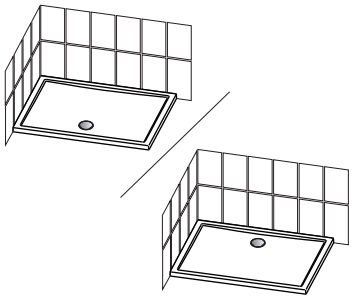

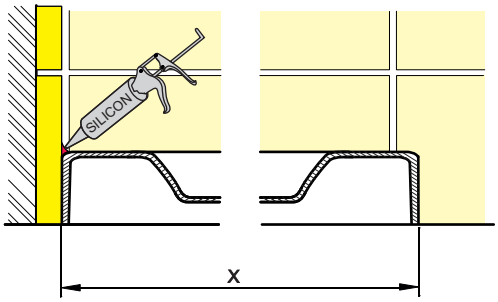
SILICON
X

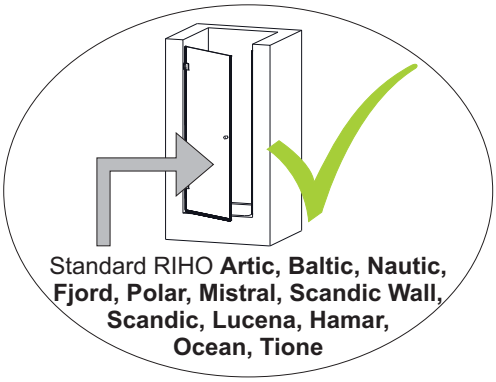
Standard RIHO **Artic, Baltic, Nautic, Fjord, Polar, Mistral, Scandic Wall, Scandic, Lucena, Hamar, Ocean, Tione**

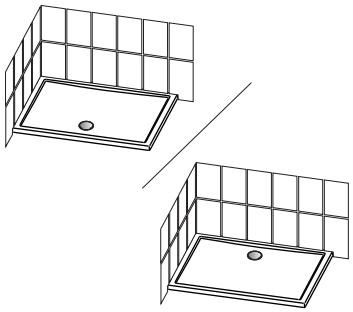

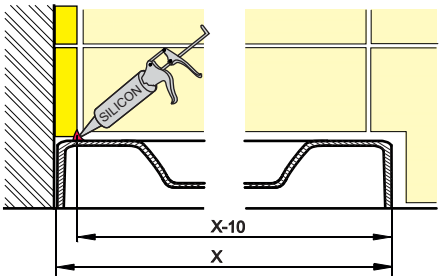
SILICON
X-10
X

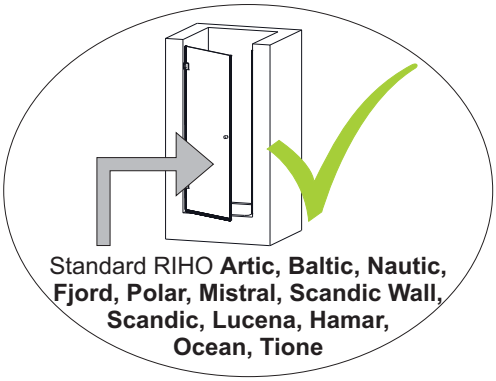
Standard RIHO **Artic, Baltic, Nautic, Fjord, Polar, Mistral, Scandic Wall, Scandic, Lucena, Hamar, Ocean, Tione**

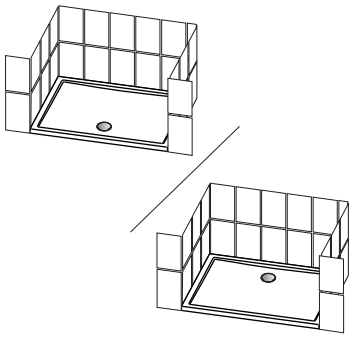

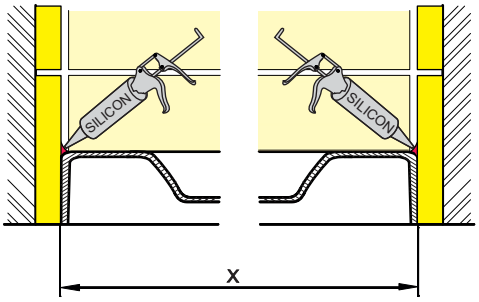
SILICON
SILICON
X

Standard RIHO
Hamar, Ocean

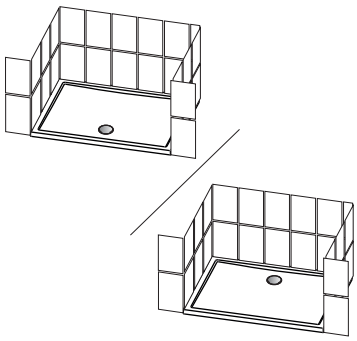

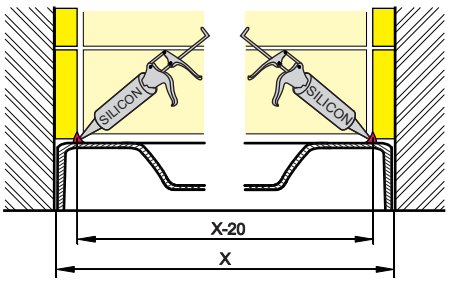
SILICON
SILICON
X-20
X

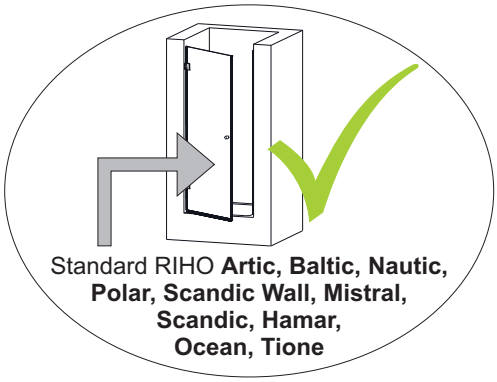
Standard RIHO **Artic, Baltic, Nautic, Polar, Scandic Wall, Mistral, Scandic, Hamar, Ocean, Tione**