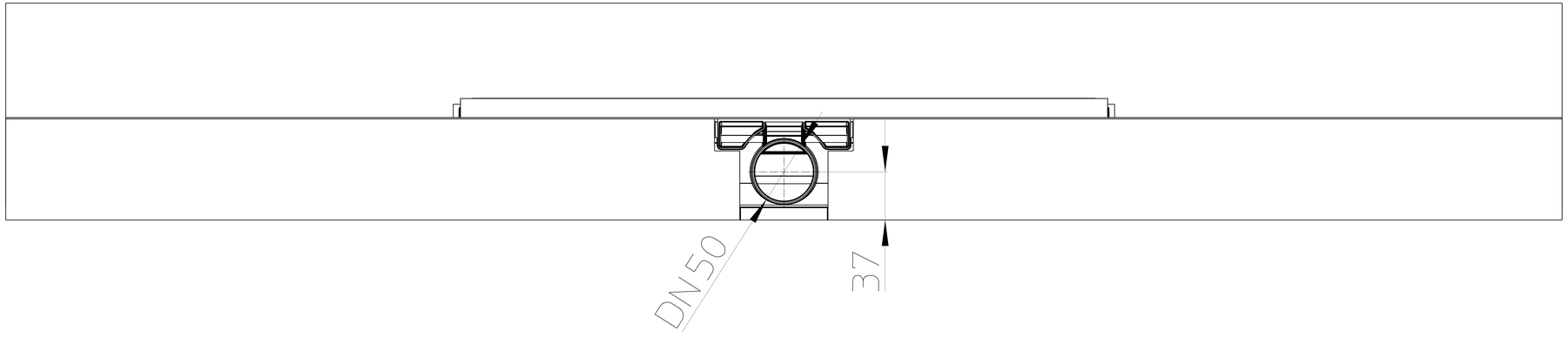
DN50
37

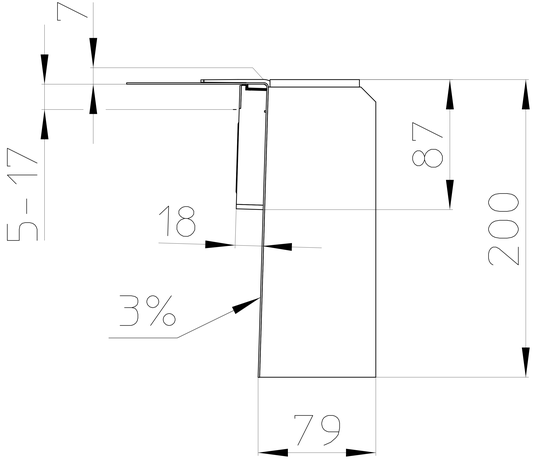
7
5-17
87
200
18
3%
79

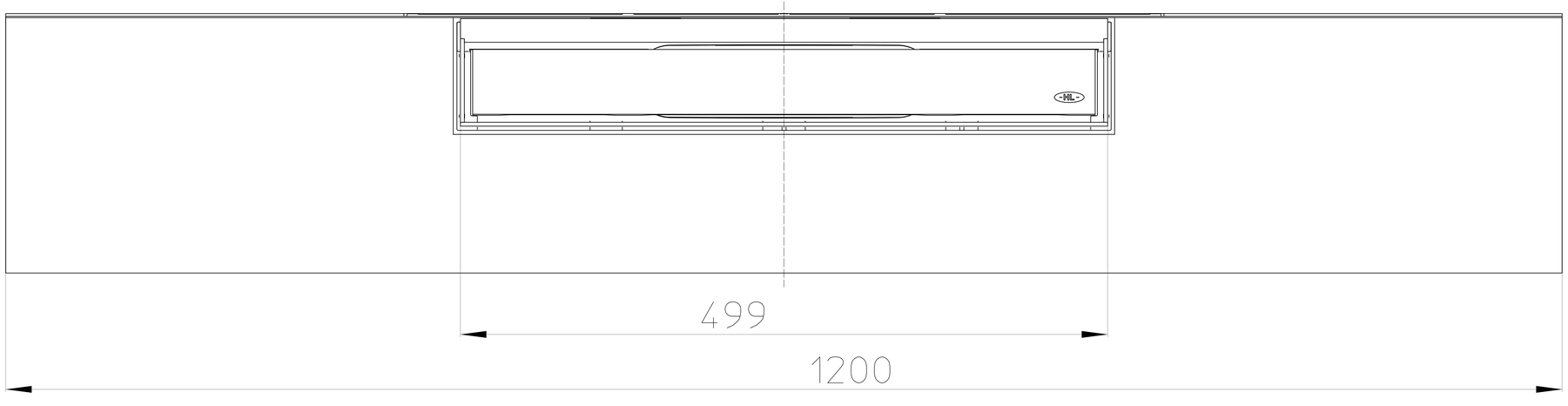
499
1200