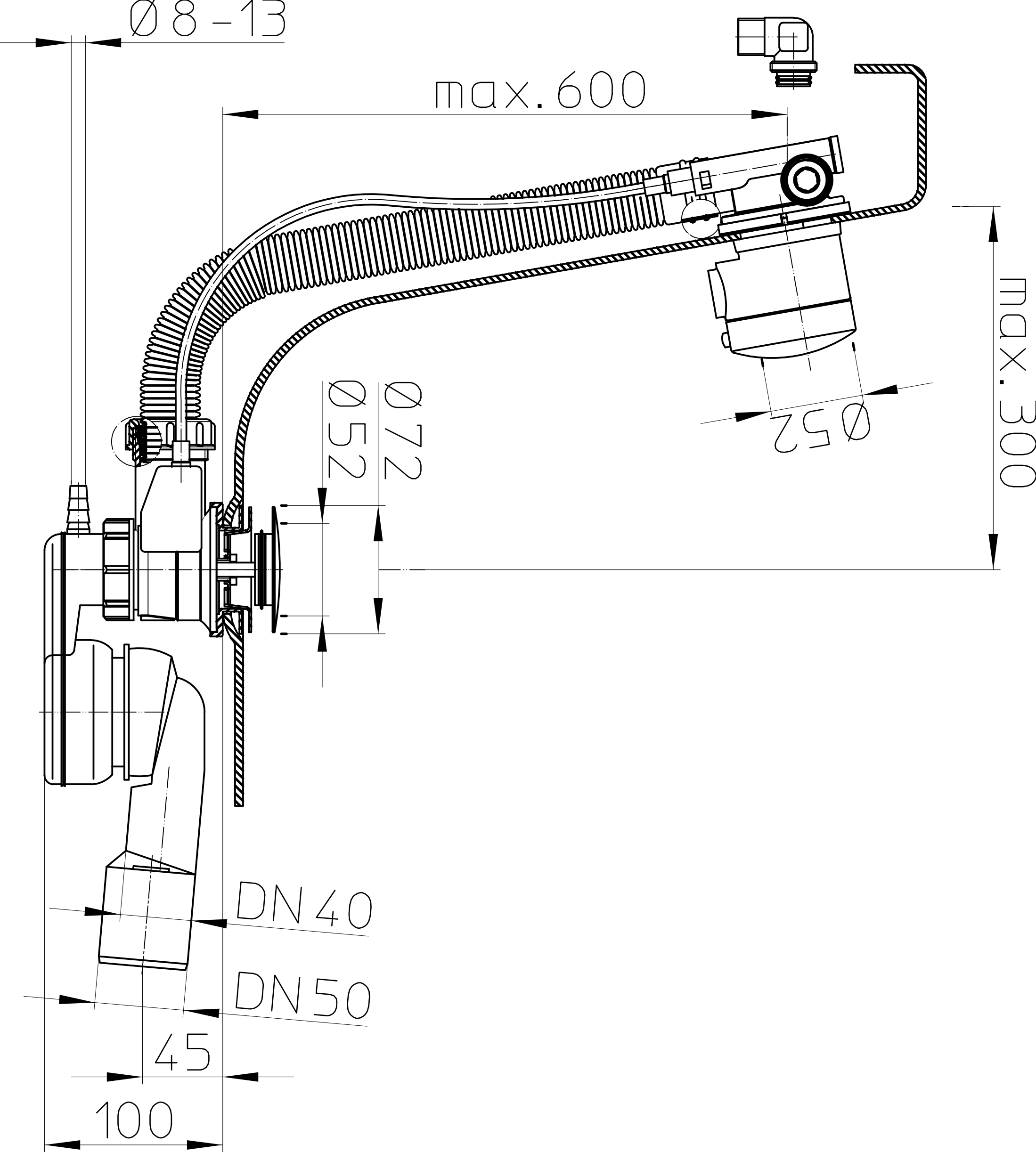
Ø8-13
max.600
max.300
Ø52
Ø72
Ø52
DN40
DN50
45
100