Article Number B1711

CERAFLEX
One-hole basin mixer BlueStart®

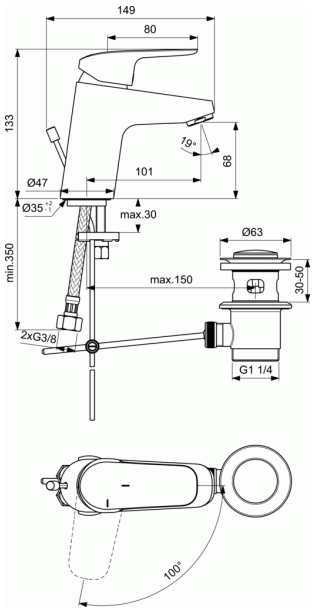

One-hole basin mixer BlueStart®
38 mm cartridge FirmaFlow® with hot water limiter
Brass cast body
Metal handle with red and blue colour indication - printed on handle
Cold start indication
Slim Perlator aerator with 5 l/min flow rate limiter
Metal pop-up waste
Flexible hoses G3/8" for water supply system connection
Easy-Fix system for installation
Comply with EN817

VARIANTS

One-hole basin mixer	B1707
One-hole basin mixer	B1708

FINISHES*

AA

* AA = Chrome

KEY FEATURES & BENEFITS