Article Number BC178

CERALOOK
One-hole sink mixer BlueStart®

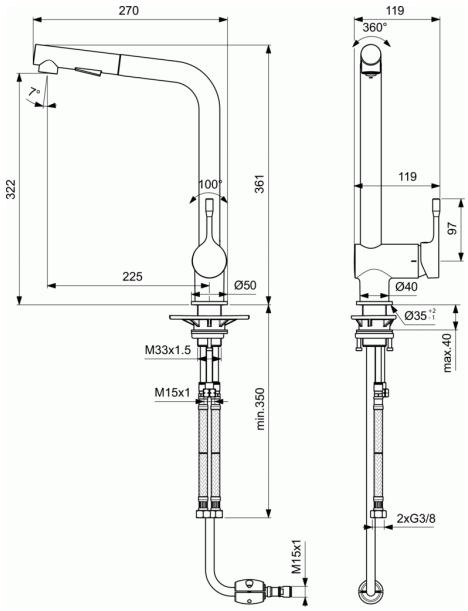

One-hole sink mixer BlueStart®
Brass body with pull-out multifunctional spray
Metal handle with red and blue colour indication - printed on handle
Cold start indication in central position
Hidden aerator
38 mm cartridge FirmaFlow® with hot water limiter + Click technology
Flexible hoses PEX G3/8"
Easy-Fix system for installation with centering & sealing ring
Finish: Chrome
Packaging: picture box
Comply with EN817

FINISHES*

☐ GN ☐ AA

* GN = Silver Storm, AA = Chrome

KEY FEATURES & BENEFITS