Article Number BC198

CERALINE
4-hole bath & shower mixer with spout

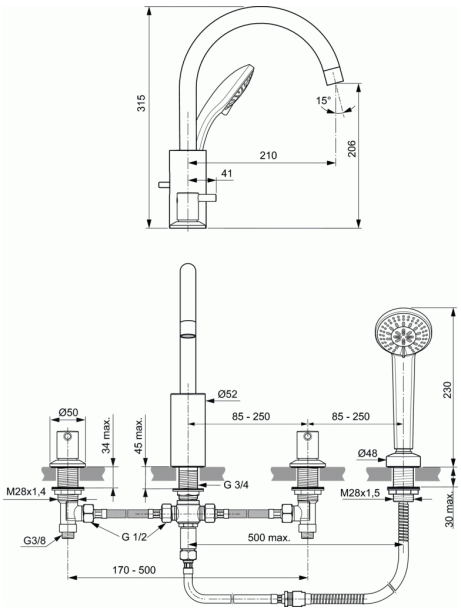

4-hole bath & shower mixer with spout
RIM mounted G1/2 nuts with sealing system for water supply system connections
Ceramic valves G1/2 90° left and right
With accessories (Idealrain Soft 3F hand shower 80 mm, double clenched metal hose)
Metal handles
Manual diverter
Perlator aerator
Comply with EN817

FINISHES*

AA

* AA = Chrome