Article Number A7193

# CERAFINE O
# Built-in bath & shower mixer

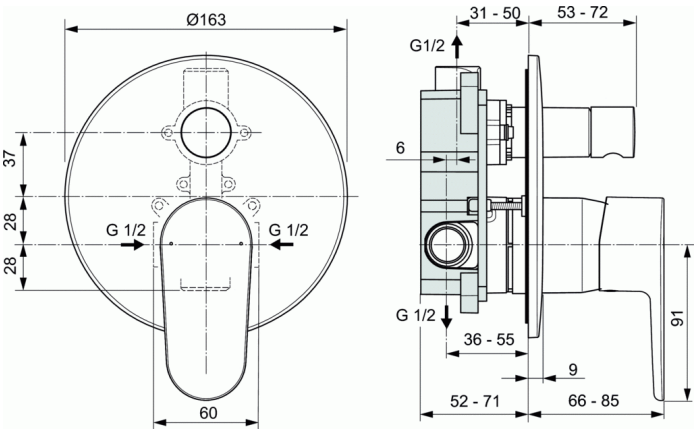


**Built-in bath & shower mixer**
Kit 1 + Kit 2 version (complete set)
47 mm Click cartridge
Automatic diverter
Metal handle with red and blue indicator
A7193AA - Chrome plated plastic escutcheon
A7193U4/XG - Metal escutcheon
Finishes:
- technology electroplating (AA)
- technology powder coating (XG, U4)

Comply with EN817

**FINISHES***

U4 AA XG

* U4 = Matt black/chrome, AA = Chrome, XG = Silk Black (Matt Black)