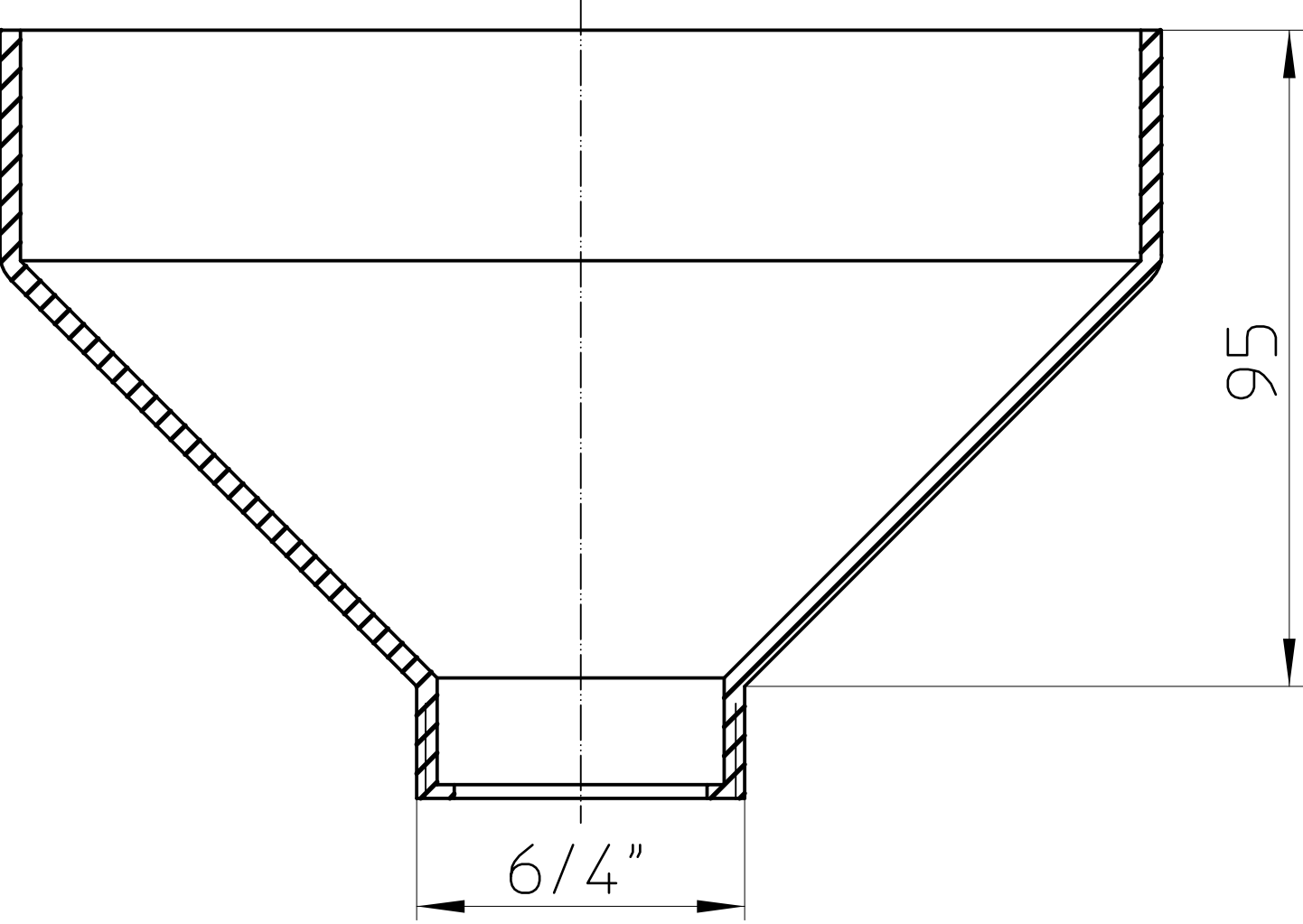
95
6/4"

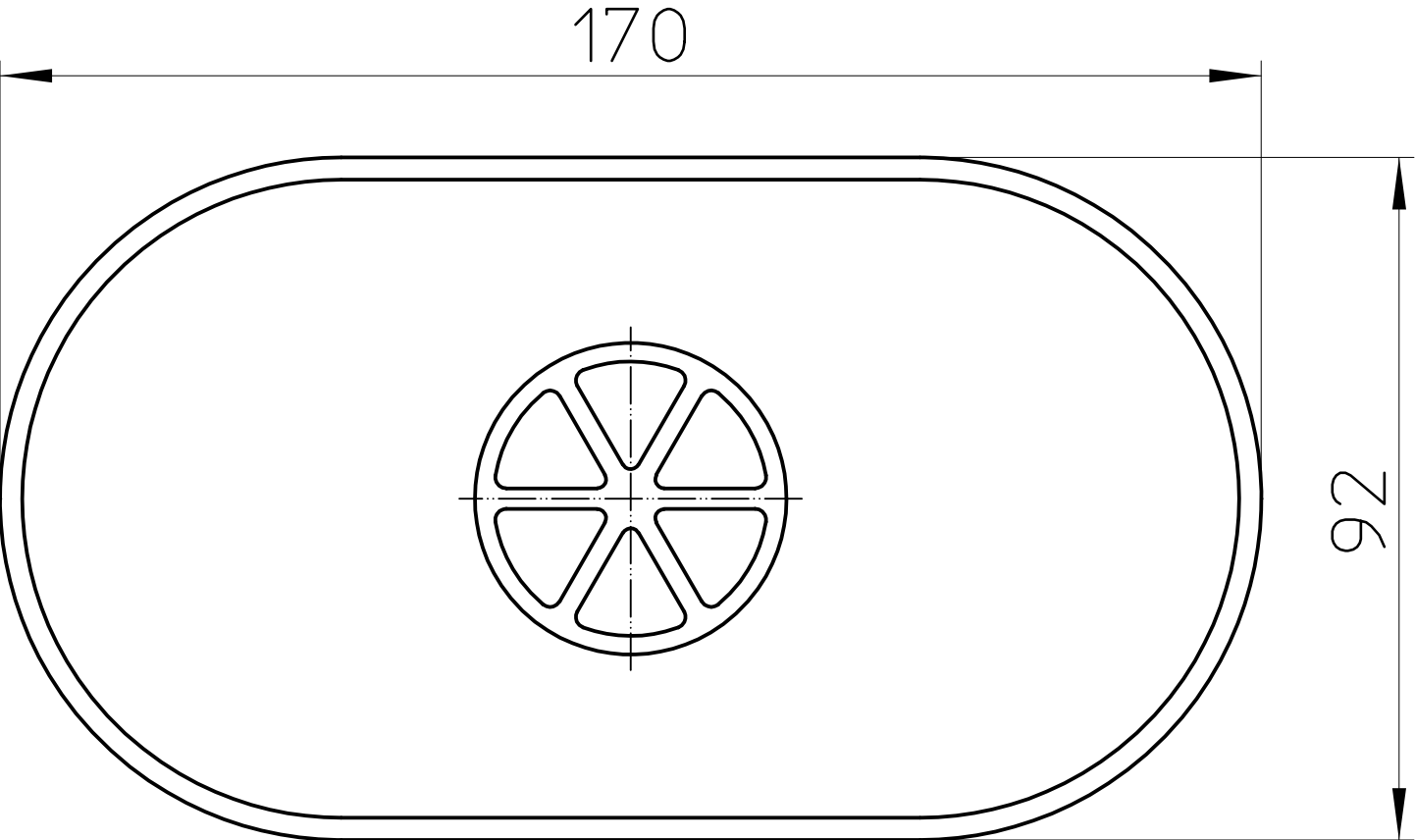
170
92