STEINBERG

100 1300 Single lever bidet mixer

with ceramic cartridge, with pop up waste 1 ¼",
with flexible hoses 3/8", projection 110 mm, chrome

PRODUCT IMAGE

STEINBERG

100 1300 Single lever bidet mixer

with ceramic cartridge, with pop up waste 1 ¼",
with flexible hoses 3/8", projection 110 mm, chrome
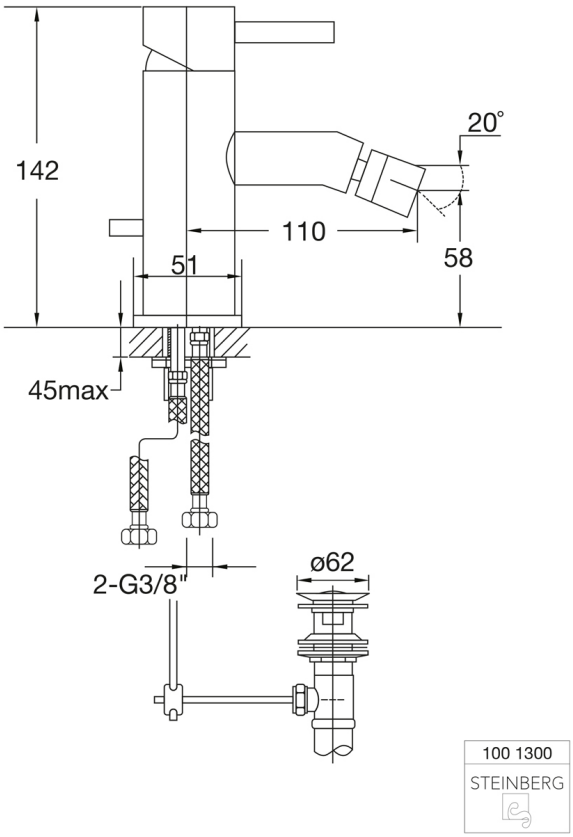
TECHNICAL DRAWING