Article Number BC646

ALPHA
One-hole basin mixer BlueStart®

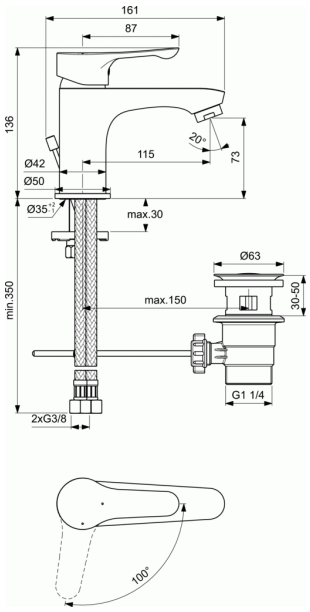

One-hole basin mixer BlueStart®
35 mm ceramic cartridge with hot water limiter
Cold start BlueStart® technology
Metal handle with red and blue colour indication
Perlator aerator with 5 l/min flow rate limiter
Easy-Fix system for installation
Flexible hoses G3/8” for water supply
Plastic pop-up waste
Comply with EN817

FINISHES*

AA

* AA = Chrome

KEY FEATURES & BENEFITS