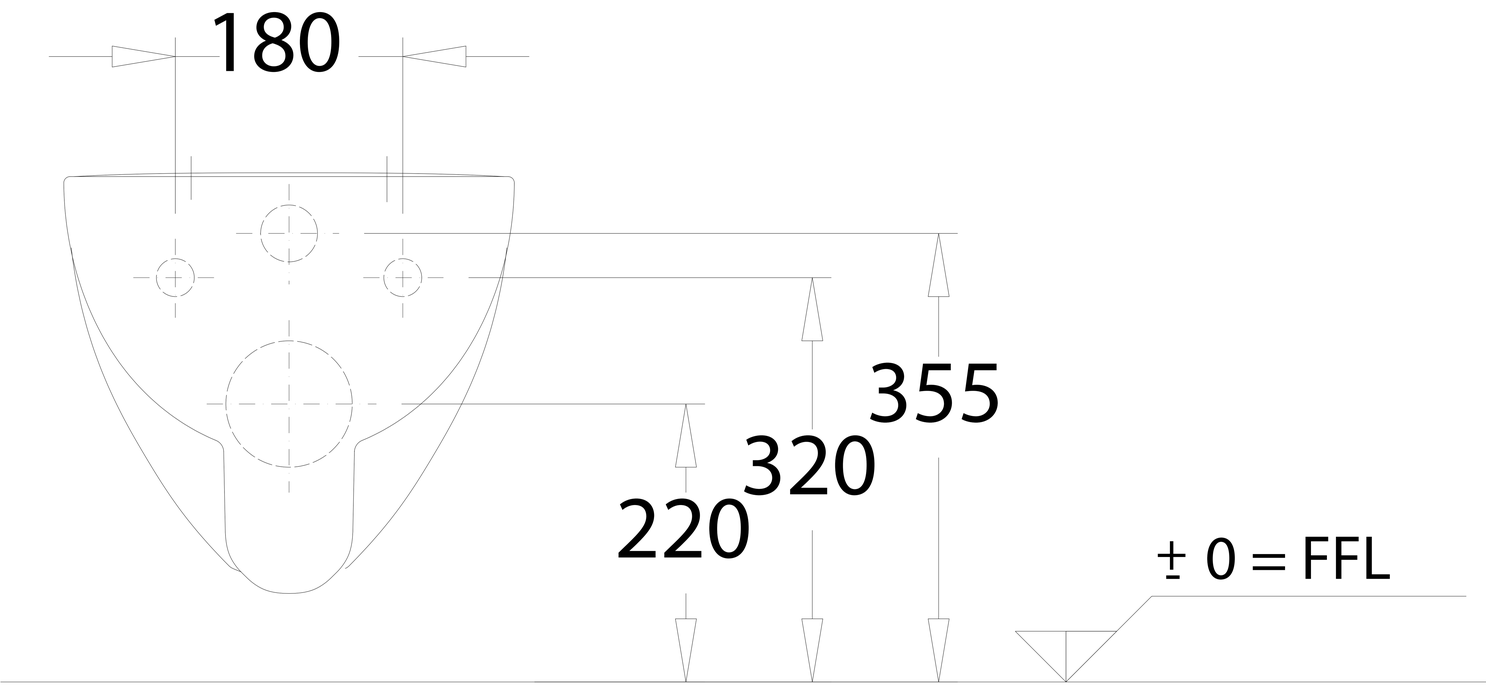

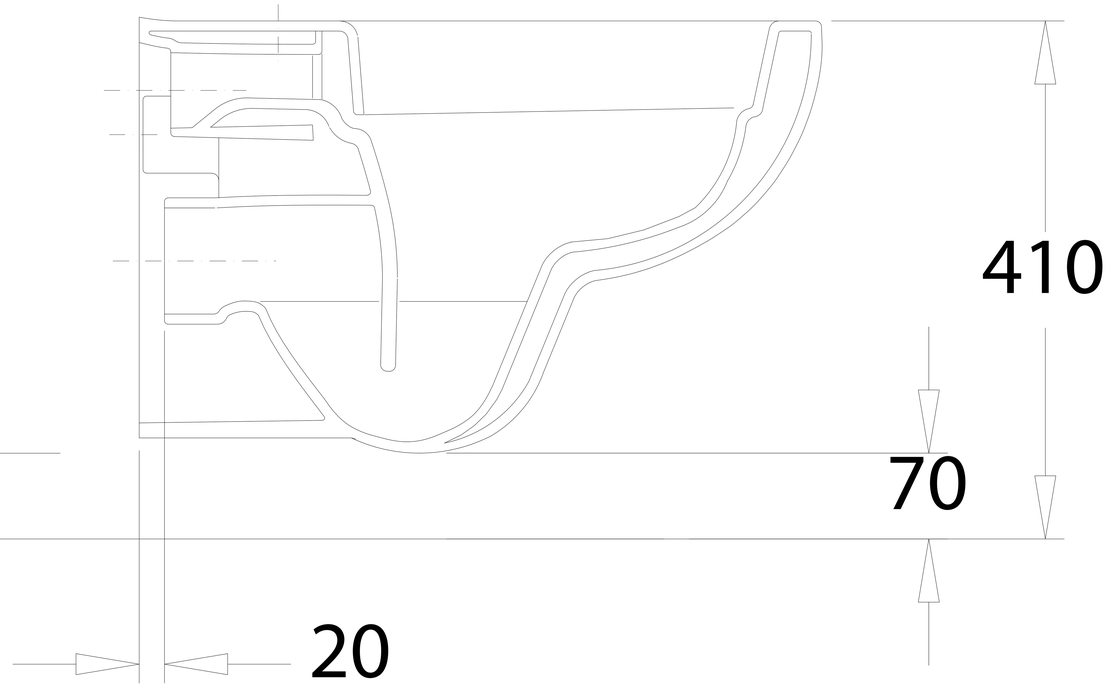

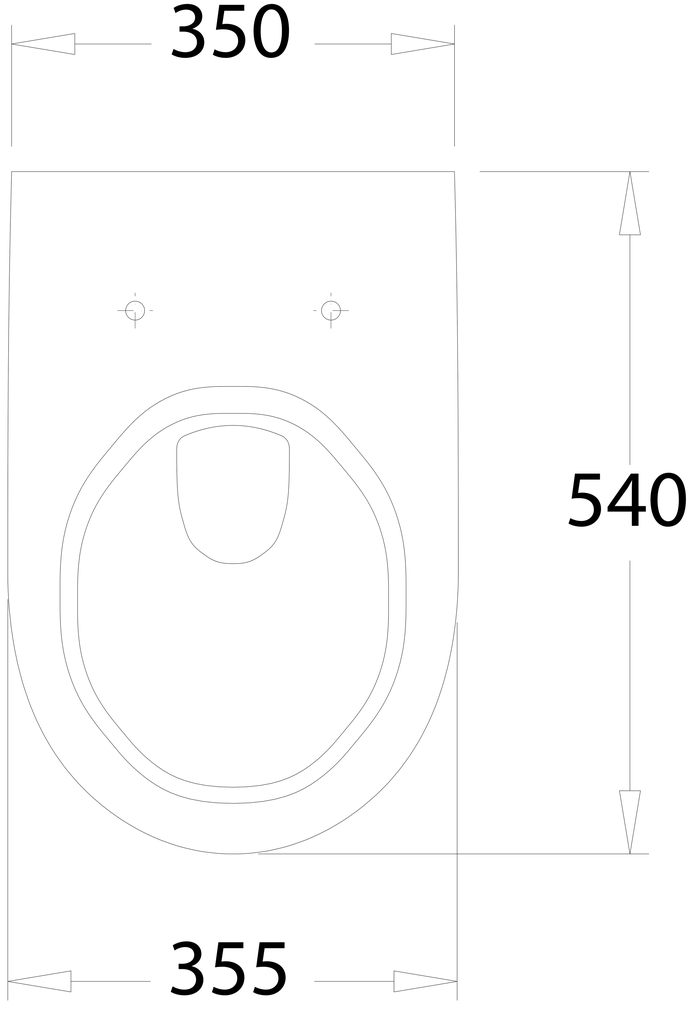

Model 20 30 50