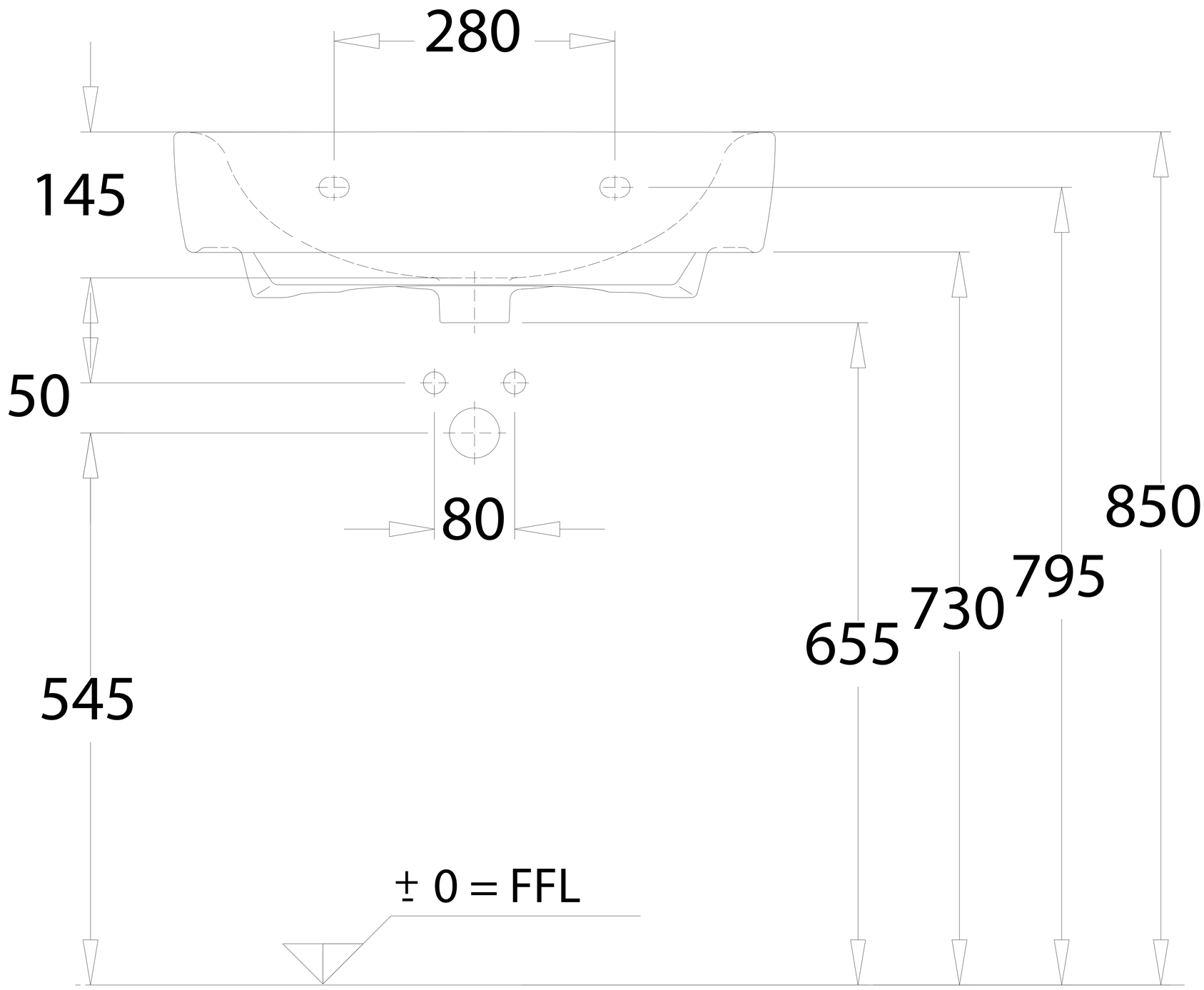

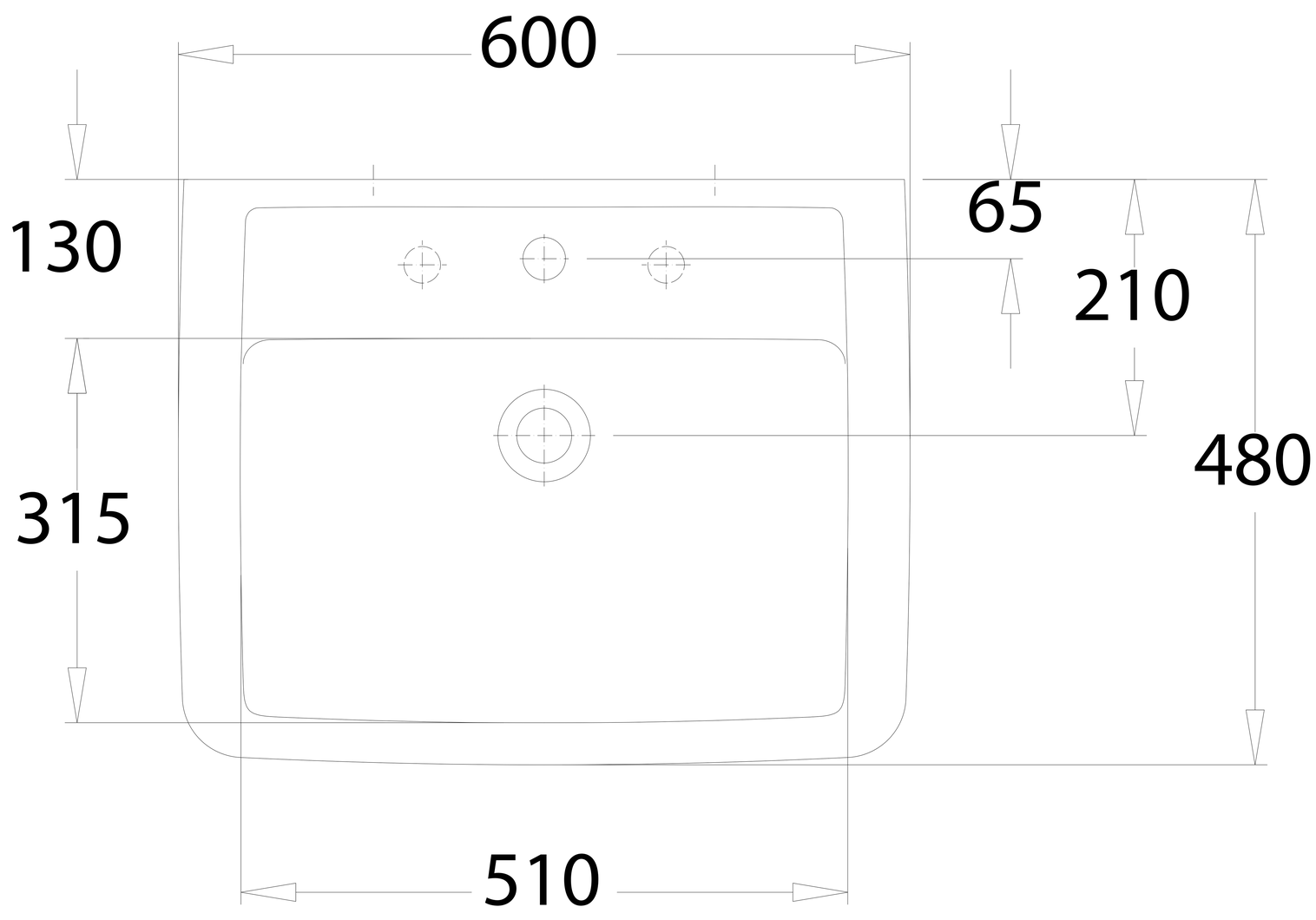

Model 22 22 60