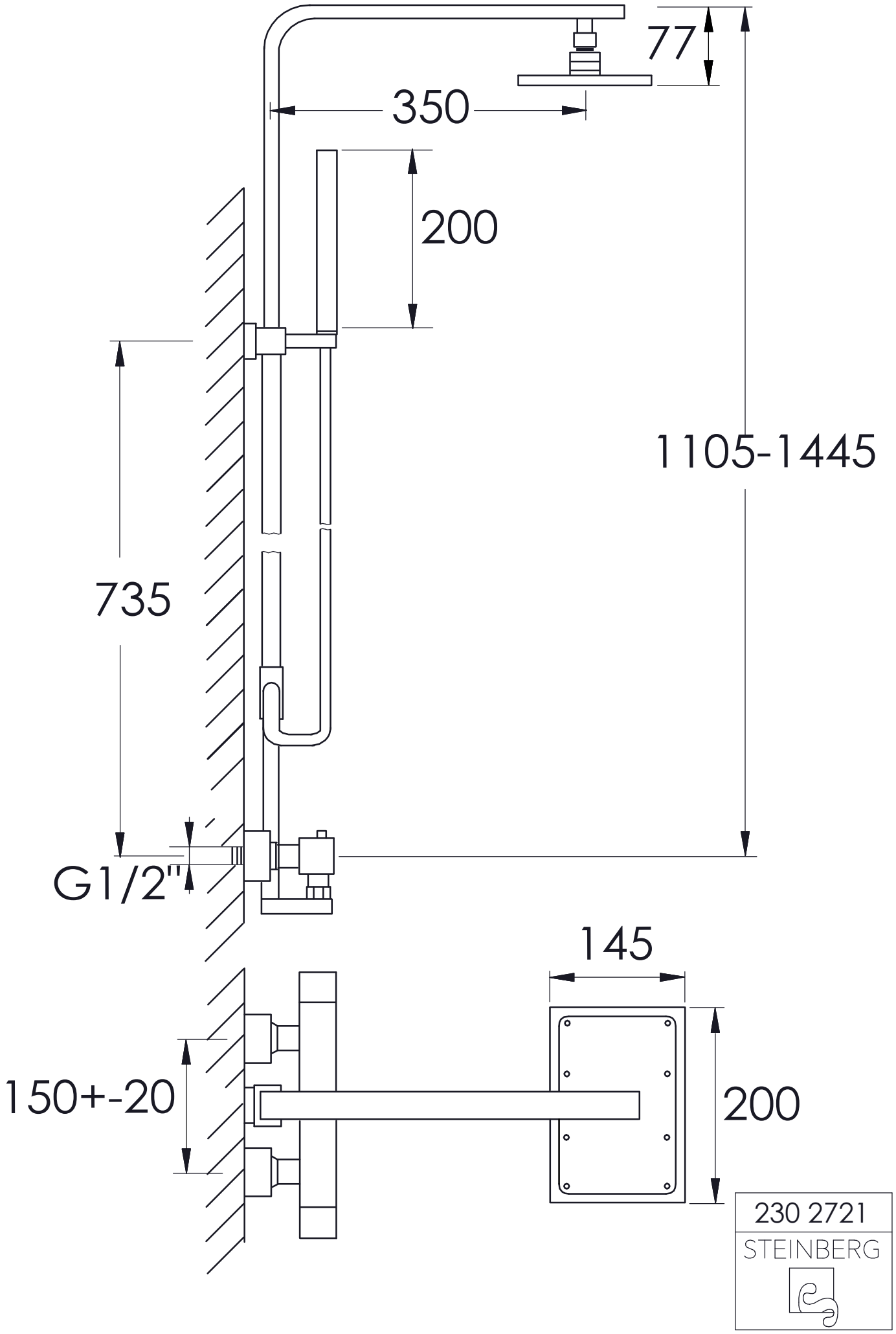
77
350
200
1105-1445
735
G1/2"
145
150+-20
200
230 2721
STEINBERG