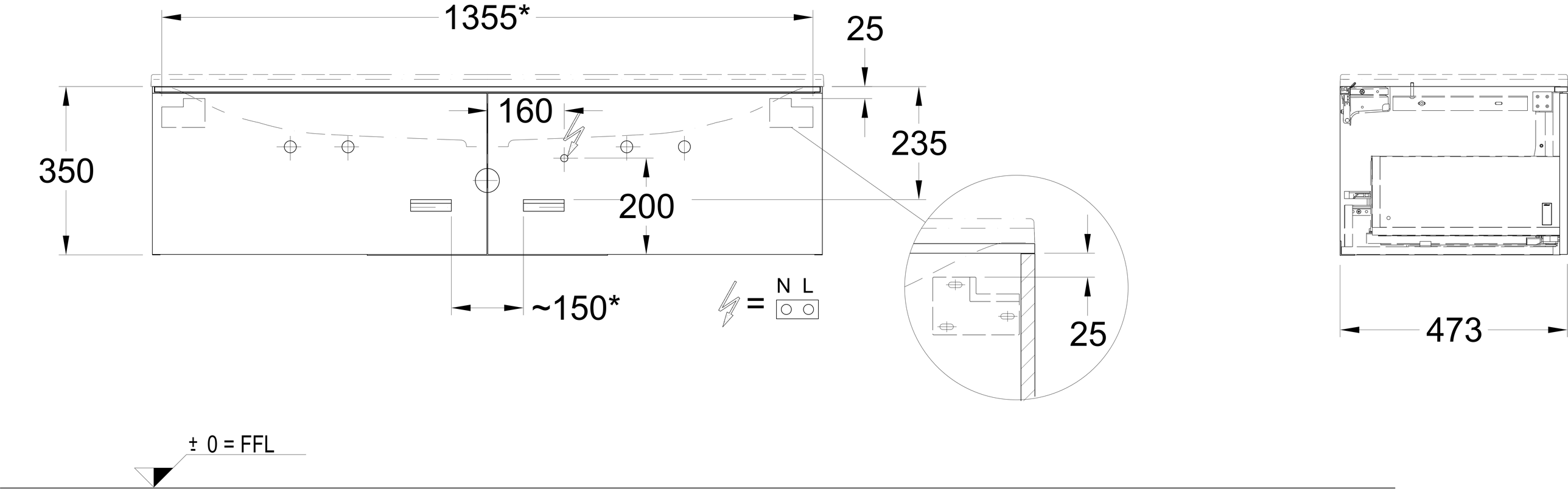


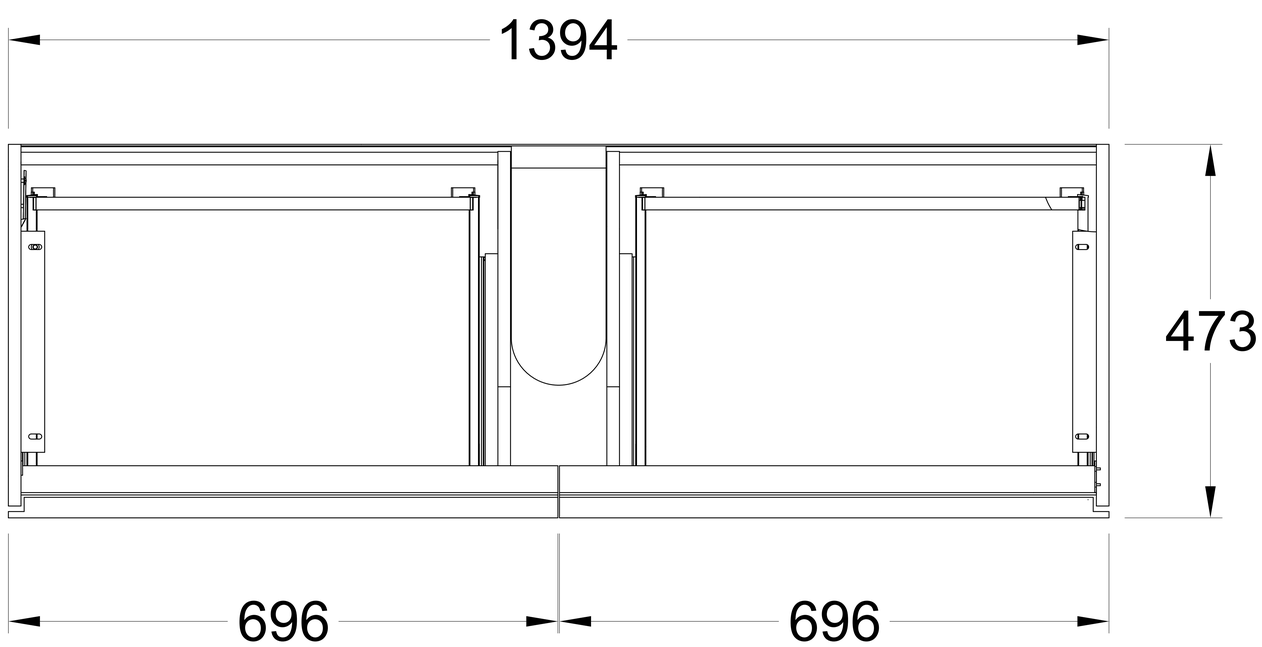


Model 80 77 42